MAYSER®

Innovative by tradition.

# DIY Sensor profiles SP

EN | Product information

**Mayser GmbH & Co. KG**
Örlinger Straße 1–3
89073 Ulm
GERMANY
Phone: +49 731 2061-0
Fax: +49 731 2061-222
E-mail: info.ulm@mayser.com
Internet: www.mayser.com

MAYSER®

# Content


Overview ..... 4
Materials list ..... 5
Definitions ..... 7
- Pressure-sensitive protection device ..... 7
- Operation principle 2-wire-technology ..... 8
- Operation principle 4-wire-technology ..... 9

Safety ..... 11
- Intended use ..... 11
- Limits ..... 11
- Exclusions ..... 11
- Other safety aspects ..... 12

Design ..... 12
- Effective actuation area ..... 13
- Installation position ..... 13

Connection ..... 14
- Cable exits ..... 14
- Cable connection ..... 15
- Wire colours ..... 15
- Connection examples ..... 15

Sensor surface ..... 16
- Resistances ..... 16

Attachment ..... 18
- Aluminium profiles: Overview of combinations ..... 18
- Aluminium profiles: Mounting types ..... 19
- Aluminium profile: Dimensions ..... 20

SP: The right selection ..... 22
- Calculation for selection of the safety edge height ..... 22
- Calculation examples ..... 22

Maintenance and cleaning ..... 24
Technical data ..... 25
- SK SP 17-3 TPE ..... 25
- SK SP 37-1 TPE ..... 27
- SK SP 37(L)-2 TPE ..... 29
- SK SP 37-3 TPE ..... 31
- SK SP 57(L)-2 TPE ..... 33
- SK SP 57-3 TPE ..... 35
- SK SP 57(L)-4 TPE ..... 37



**Copyright**
The reproduction, distribution and utilization of this document as well as the communication of its contents without express authorization are prohibited. Offenders will be held liable for the payment of damages. All rights reserved in the event of the grant of a patent, utility model or design.
© Mayser Ulm 2021


270121 v3.11-RiA

SK SP 67-2 TPE ..... 39
SK SP 87-2 TPE ..... 41
**Marking ..... 43**
**Conformity ..... 43**
EC design test ..... 43
**UL certification ..... 43**

270121 v3.11-RiA

# Overview

**Contact profile – Sensor profile**

The semi-finished contact profile (Pos. 4) is cut to length and assembled with the other components. The functioning product is then called a sensor profile.

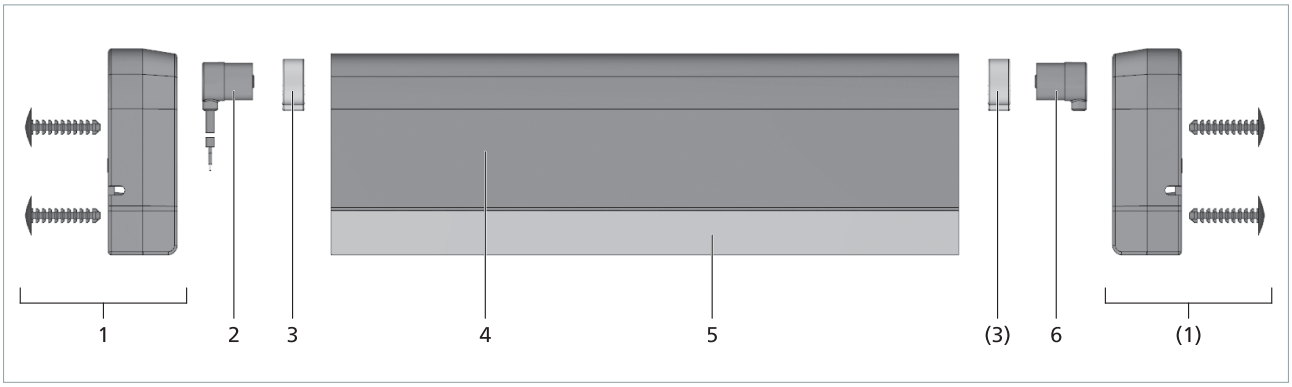


Positions 2, 3 and 6 are identical for all sensor profiles.

| | | |
|---|---|---|
| Pos. 2 | Closing plug with cable 2.5 m | 7502873 |
| Pos. 3 | Ear clamp | 1005684 |
| Pos. 6 | Closing plug with resistor | 7502875 |

Alternatives for position 2 are:

| | | |
|---|---|---|
| | Closing plug with cable 5.0 m | 7503774 |
| | Closing plug with cable 10 m | 7503775 |

| Sensor profile | Pos. 1 Set of end caps | Pos. 4 Contact profile | | Pos. 5 Aluminium profile | |
|---|---|---|---|---|---|
| SP 17-3 without end caps | 1005786 | SP 17-3 | 7503461 | C 15 | 1000016 |
| SP 37-1 without end caps | 1000606 | SP 37-1 | 7502853 | C 25 | 1000004 |
| SP 37-1 with end caps | 7503008 | SP 37-1 | 7502853 | C 25 | 1000004 |
| SP 37-2 with end caps | 7503988 | SP 37-2 | 7503318 | C 26 | 1004330 |
| SP 37L-2 with end caps | 7503988 | SP 37L-2 | 7504192 | C 26 | 1004330 |
| SP 37-3 with end caps | 7503505 (7503654) | SP 37-3 | 7503343 | C 25 | 1000004 |
| SP 57-2 with end caps | 7503062 (7503603) | SP 57-2 | 7503055 | C 30 | 1005844 |
| SP 57L-2 with end caps | 7503062 (7503603) | SP 57L-2 | 7503412 | C 30 | 1005844 |

270121 v3.11-RiA

*Subject to technical modifications.*

| Sensor profile | Pos. 1<br>Set of end caps | Pos. 4<br>Contact profile | | Pos. 5<br>Aluminium profile | |
|---|---|---|---|---|---|
| SP 57-3<br>with end caps | 7503618 | SP 57-3 | 7503521 | C 35 | 1000006 |
| SP 57-4<br>with end caps | 7503618 | SP 57-4 | 7503633 | C 35 | 1000006 |
| SP 57L-4<br>with end caps | 7503618 | SP 57L-4 | 7503711 | C 35 | 1000006 |
| SP 67-2<br>with end caps | 7503655 | SP 67-2 | 7503285 | C 30 | 1005844 |
| SP 87-2<br>with end caps | 7504118 | SP 87-2 | 7503722 | C 36 | 1003848 |

# Materials list

| Part No. | Designation | PU |
|---|---|---|
| 7503461 | Contact profile SP 17-3 TPE | 80 m |
| 7502853 | Contact profile SP 37-1 TPE | 30 m |
| 7503318 | Contact profile SP 37-2 TPE | 30 m |
| 7504192 | Contact profile SP 37L-2 TPE | 30 m |
| 7503343 | Contact profile SP 37-3 TPE „black“ | 30 m |
| 7503534 | Contact profile SP 37-3 TPE „red“ | 30 m |
| 7503055 | Contact profile SP 57-2 TPE | 30 m |
| 7503412 | Contact profile SP 57L-2 TPE | 30 m |
| 7503521 | Contact profile SP 57-3 TPE | 25 m |
| 7503633 | Contact profile SP 57-4 TPE | 25 m |
| 7503711 | Contact profile SP 57L-4 TPE | 25 m |
| 7503285 | Contact profile SP 67-2 TPE | 30 m |
| 7503722 | Contact profile SP 87-2 TPE | 25 m |
| 7502875 | Closing plug with resistor 8k2 | 10 pc. |
| 7502873 | Closing plug with PUR cable 2.5 m, angled 90° | 10 pc. |
| 7503774 | Closing plug with PUR cable 5.0 m, angled 90° | 10 pc. |
| 7503775 | Closing plug with PUR cable 10 m, angled 90° | 10 pc. |
| 7503708 | Closing plug without resistor | 10 pc. |
| 1005684 | Ear clamp for closing plug | 20 pc. |
| 1005786 | Countersunk tapping screw 3,5x25 for SP 17-3 | 20 pc. |
| 7503008 | Set of end caps for SP 37-1:<br>each containing 2 end caps, fixing stoppers and screw 3.9×25 | 10 pc. |
| 7503988 | Set of end caps for SP 37(L)-2:<br>each containing 2 end caps and 4 pine tree clips | 10 pc. |
| 7503505 | Set of end caps for SP 37-3 „black“:<br>each containing 2 end caps and pine tree clip | 10 pc. |

*Subject to technical modifications.*

270121 v3.11-RiA

| Part No. | Designation | PU |
|---|---|---|
| 7503654 | Set of end caps for SP 37-3 „red“: each containing 2 end caps and pine tree clip | 10 pc. |
| 7503062 | Set of end caps for SP 57(L)-2: each containing 2 end caps and 4 screws 5×20 | 10 pc. |
| 7503603 | Set of end caps for SP 57(L)-2 with clip: each containing 2 end caps and 4 pine tree clip | 10 pc. |
| 7503618 | Set of end caps for SP 57-3 and SP 57(L)-4: each containing 2 end caps and 6 pine tree clips | 10 pc. |
| 7503655 | Set of end caps for SP 67-2: each containing 2 end caps and 4 pine tree clips | 10 pc. |
| 7504118 | Set of end caps for SP 87-2: each containing 2 end caps and 8 pine tree clips | 10 pc. |
| 1000016 | Aluminium profile C 15 | 6 m |
| 1000854 | Aluminium profile C 25M, upper section | 6 m |
| 1000855 | Aluminium profile C 25M, lower section | 6 m |
| 1000829 | Aluminium profile C 25L | 6 m |
| 1000012 | Aluminium profile C 25S | 6 m |
| 1000004 | Aluminium profile C 25 | 6 m |
| 1004626 | Aluminium profile C 26M, upper section | 6 m |
| 1004627 | Aluminium profile C 26M, lower section | 6 m |
| 1004330 | Aluminium profile C 26, perforated | 6 m |
| 1005844 | Aluminium profile C 30 | 6 m |
| 1001398 | Aluminium profile C 35M, upper section | 6 m |
| 1001399 | Aluminium profile C 35M, lower section | 6 m |
| 1000013 | Aluminium profile C 35S | 6m |
| 1000006 | Aluminium profile C 35 | 6 m |
| 1004629 | Aluminium profile C 36M, upper section | 6 m |
| 1004630 | Aluminium profile C 36M, lower section | 6 m |
| 1003849 | Aluminium profile C 36L, perforated | 6 m |
| 1003850 | Aluminium profile C 36S, perforated | 6 m |
| 1003848 | Aluminium profile C 36, perforated | 6 m |
| 1001223 | End stopper for C 25M, for SP without end caps | 1 pc. |
| 1000606 | End stopper for C 25 or C 25S, for SP without end caps | 1 pc. |
| 1005906 | Scissors with stop, cutting length 87 mm | 1 pc. |
| 7502868 | Assembly aid SH3 | 1 pc. |
| 1005741 | Notching pliers Knipex 7742115 | 1 pc. |
| 1005729 | Vice-grip pliers Knipex System Oetiker 1099 | 1 pc. |

270121 v3.11-RiA

*Subject to technical modifications.*

# Definitions

## Pressure-sensitive protection device

A pressure-sensitive protection device consists of pressure-sensitive sensor(s), signal processing and output signal switching device(s). The control unit is made up of the signal processing and output signal switching device(s). The pressure-sensitive protection device is triggered when the sensor is activated.

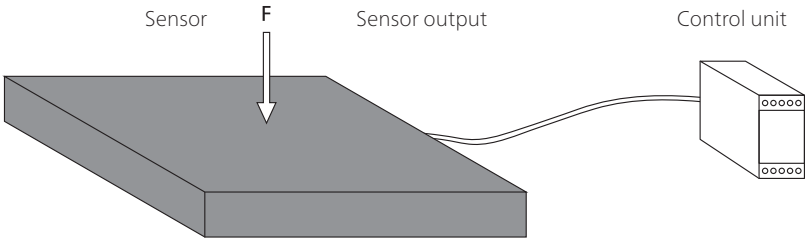


### Sensor

The sensor is the part of the pressure-sensitive protection device that generates a signal when the actuating force F is applied. Mayser safety systems have a sensor whereby the actuating surface is deformed locally.

### Signal processing

The signal processing is the part of the pressure-sensitive protection device that converts the output signal of the sensor and controls the status of the output signal switching device. The output signal switching device is that part of the signal processing which is connected to the machine controls and transmits safety output signals such as STOP.

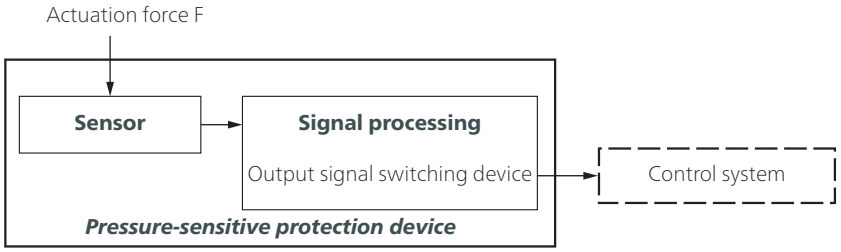


Tip: Terms are defined in ISO 13856-2, Chapter 3.

270121 v3.11-RiA

*Subject to technical modifications.*

**Criteria for selecting the sensor type**

- Category according to ISO 13849-1
- Performance level of pressure-sensitive protection device = at least $PL_r$
- Temperature range
- Degree of protection in accordance with IEC 60529:
  IP67 is the standard for safety edges.
  Higher degrees of protection must be checked individually.
- Environmental influences such as swarf, oil, coolant, outdoor use...
- Finger detection necessary?

## Operation principle 2-wire-technology

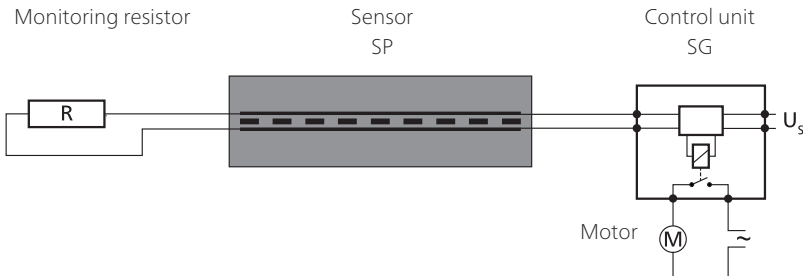


The monitoring resistor must be compatible with the control unit. Standard value is 8k2.

For your safety:
Sensor and connecting cables are constantly monitored for function. Monitoring is carried out by controlled bridging of the contact surfaces with a monitoring resistor (closed current principle).

**Design**

SP/BK with cables on both sides as a through sensor or as an end sensor with external monitoring resistor

SP/W as an end sensor with integrated monitoring resistor

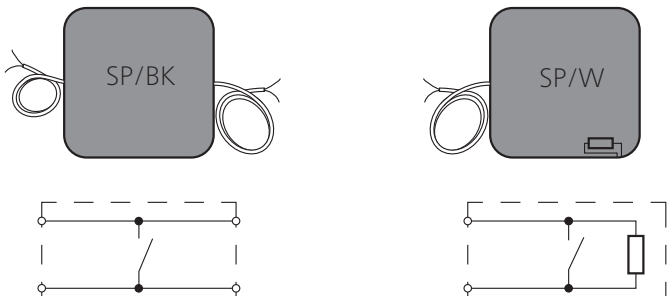


270121 v3.11-RiA

*Subject to technical modifications.*

**Combination of sensors**

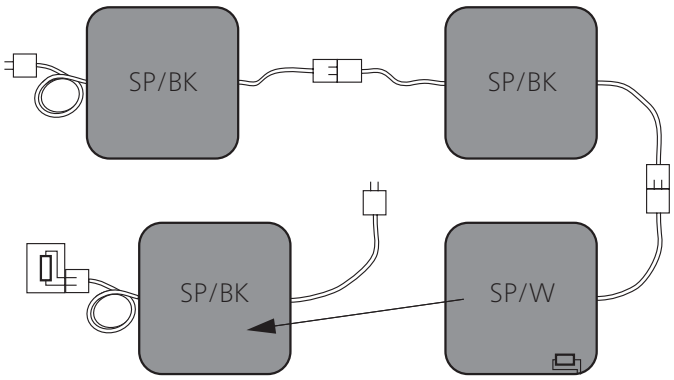


Model with external resistor, thus avoiding variety in type

Combination:

- Connection of more than one sensor
- Only one control unit required
- Safety edge design with custom lengths and angles

## Operation principle 4-wire-technology

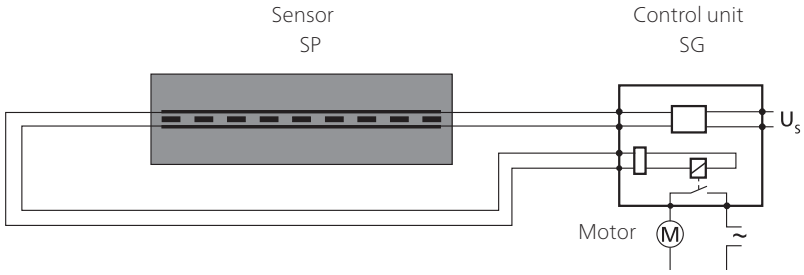


The 4-wire technology can be used only together with control unit SG-EFS 104/4L.

For your safety:
Sensor and connecting cables are constantly monitored for function. This is possible because of signal transmission feedback – without a monitoring resistor.

**Design**

SP/BK with cables on both sides as a through sensor

*Subject to technical modifications.*

### Combination of sensors

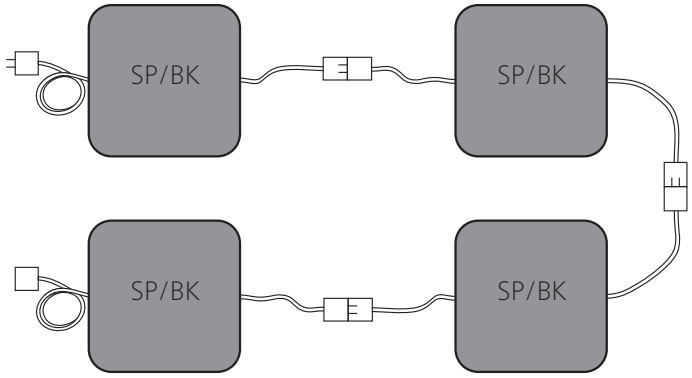


Combination:

- Connection of more than one sensor
- Only one control unit required
- Safety edge design with custom lengths and angles

270121 v3.11-RiA

*Subject to technical modifications.*

# Safety

## Intended use

A safety edge detects a person or part of the body when pressure is applied to the actuation area. It is a linear tripping device. Its task is to avoid possible hazardous situations for a person within a danger zone, such as shearing and pinching edges.
Typical areas of application are door and gate systems, moving parts on machines, platforms and lifting devices.
Safe operation of a safety edge depends entirely on

- the surface condition of the mounting surface,
- the correct selection of the size and resistance as well as
- correct installation.

For additional application guidelines refer to ISO 13856-2 Annex E.

Due to the design, the visible actuation area is reduced by the non-sensitive edges. What remains is the actual effective actuation area (see chapter *Effective actuation area*).

## Limits

- max. 5 sensors type /BK on one control unit
- max. 4 sensors type /BK and 1 sensor type /W on one control unit

## Exclusions

The sensors are not suitable for:

- performing a sealing function. Constant actuation of sensors can result in permanent damage.
  **Exception:** The L version with an attached edge seal.
  The edge seal can be in full contact with the closing edge, which allows it to repel wind and water.

270121 v3.11-RiA

*Subject to technical modifications.*

## Other safety aspects

The following safety aspects relate to pressure-sensitive protection devices consisting of a sensor and a control unit

**Performance Level (PL)**
The PL was determined during a procedure according to ISO 13849-1. Fault exclusion according to ISO 13849-2 Table D.8: Non-closing of contact by pressure-sensitive equipment according to ISO 13856. In this case the sensor will no longer be taken into account in determining the PL. The entire pressure sensitive safety edge (Pressure-sensitive protection device) system can reach a maximum of PL d.

**Is the safeguard appropriate?**
The PL required for the hazard must be decided by the integrator. This is followed by the choice of safeguard.
Finally, the integrator needs to check whether the category and PL of the safeguard chosen are appropriate.

**Risk and safety assessment**
For the risk and safety assessment of your machine we recommend ISO 12100 „Safety of machinery – general principles for design".

**Without reset function**
When a safeguard without a reset function is used (automatic reset), the reset function must be made available in some other way.

## Design

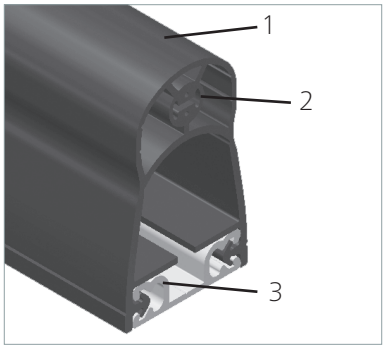


The sensor profile SP consists of one sensor (1 to 3)
(1) Contact profile SP with
(2) integrated normally open safety element,
(3) Aluminium profile and an evaluating control unit SG.

270121 v3.11-RiA

*Subject to technical modifications.*

# Effective actuation area

The parameters X, Y, Z, $L_{WB}$ and the angle α describe the effective actuation area.
For the effective actuation area, the following applies:

$L_{WB} = L_{SP} - 2 \times L_{NE}$

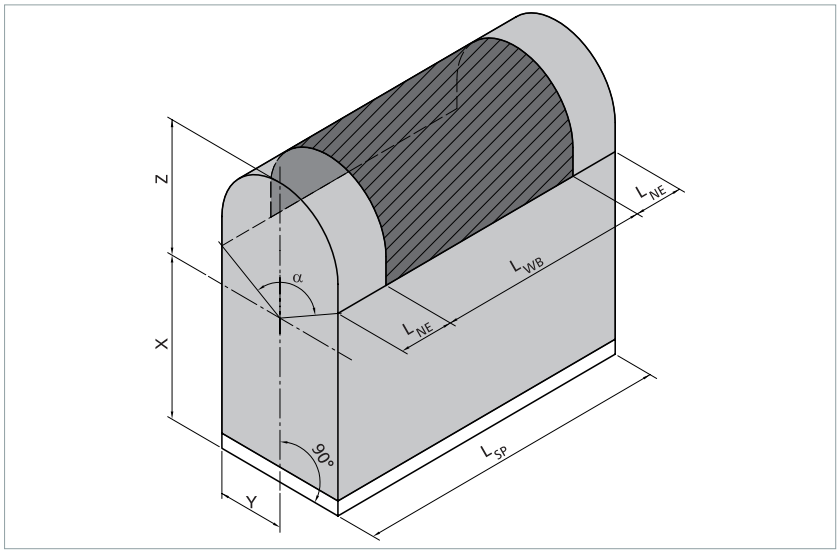


Parameters:
$L_{WB}$ = effective actuation length
$L_{SP}$ = total length of sensor profile
$L_{NE}$ = non-sensitive length at end of sensor profile
α = effective actuation angle (Actuation angle)

| | SP 17-3 [1] | SP 37-1 | SP 37(L)-2 | SP 37-3 | SP 57(L)-2 | SP 57-3 | SP 57(L)-4 | SP 67-2 | SP 87-2 |
|---|---|---|---|---|---|---|---|---|---|
| | | | | | | | | 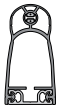 | 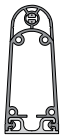 |
| Aluminium profile | C 15 | C 25 | C 26 | C 25 | C 30 | C 35 | C 35 | C 30 | C 36 |
| α | 90° | 100° | 100° | 100° | 90° | 90° | 90° | 90° | 90° |
| $L_{NE}$ | 60 mm | 20 mm | 20 mm | 20 mm | 10 mm [2] | 10 mm [2] | 10 mm [2] | 20 mm [2] | 10 mm [2] |
| Y | 6.7 mm | 12.5 mm | 13 mm | 12.5 mm | 17 mm | 17.5 mm | 17.5 mm | 17 mm | 18.1 mm |
| X | 15.3 mm | 28.5 mm | 30 mm | 29 mm | 44 mm | 52 mm | 52 mm | 57.3 mm | 72 mm |
| Z | 5 mm | 9 mm | 9 mm [3] | 9 mm | 12 mm [3] | 12 mm | 12 mm [3] | 10 mm | 15 mm |
| X + Z | 20.3 mm | 37.5 mm | 39 mm [3] | 38 mm | 56 mm [3] | 64 mm | 64 mm [3] | 67.3 mm | 87 mm |

[1] without end cap [2] with finger protection [3] without lip

# Installation position

The installation position can be selected as required, i.e. all installation positions A to D as per ISO 13856-2 are possible.

*Subject to technical modifications.*

270121 v3.11-RiA

# Connection

## Cable exits

Depending on the end cap, the following cable exits are available.

$A_L$ = axial left
$A_M$ = axial middle
$A_R$ = axial right
$O_L$ = orthogonal left
$O_M$ = orthogonal middle
$O_R$ = orthogonal right

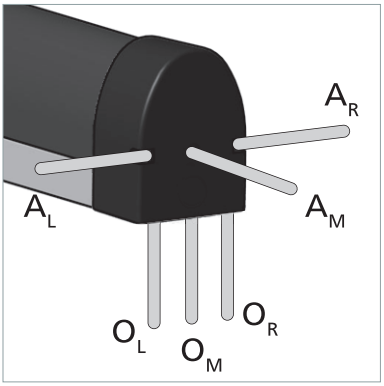


| Orientation | | Cable exit | | | | | |
|---|---|---|---|---|---|---|---|
| Lateral exit | | $A_L$ | | $A_R$ | | | |
| Axial exit | | | $A_M$ | | | | |
| 90° exit | | | | | $O_L$ | $O_M$ | $O_R$ |
| **Combination** | | | | | | | |
| Contact profile | Set of end caps | | | | | | |
| SP 17-3 | – | | ● | | | ● | |
| SP 37-1 | 7503008 | ● | | ● | ● | | ● |
| SP 37(L)-2 | 7503988 | ● | ● | ● | | ● | |
| SP 37-3 black | 7503505 | ● | | ● | ● | | ● |
| SP 37-3 red | 7503654 | ● | | ● | ● | | ● |
| SP 57(L)-2 | 7503062 | ● | ● | ● | | ● | |
| | 7503603 | ● | ● | ● | | ● | |
| SP 57-3 | 7503618 | ● | ● | ● | ● | | ● |
| SP 57(L)-4 | 7503796 | ● | ● | ● | ● | | ● |
| SP 67-2 | 7503655 | ● | ● | ● | | ● | |
| SP 87-2 | 7504118 | ● | ● | ● | | ● | |

● = possible

270121 v3.11-RiA

*Subject to technical modifications.*

# Cable connection

- Standard cable lengths
  L = 2.5 m / 5.0 m / 10 m
- Maximum total cable length to the control unit
  $L_{max}$ = 100 m

| **Sensor type /W with 1 line** | **Sensor type /BK with 2 lines** |
|---|---|
| • As an individual sensor type /W or an end sensor type /W<br>• Integrated resistor<br>• 2-wire cable (Ø 2.9 mm PUR, 2× 0.25 mm² Cu) | • As a feed-through sensor type /BK<br>• Without resistor<br>• 2 two-wire cables (Ø 2.9 mm PUR, 2× 0.25 mm² Cu) |
| 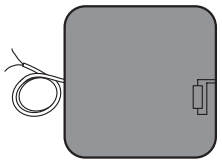 | 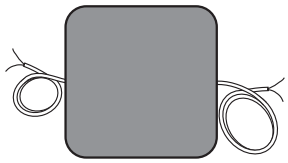 |

# Wire colours

| **Sensor type /W with 1 line** | **Sensor type /BK with 2 lines** |
|---|---|
| 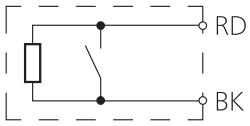 | 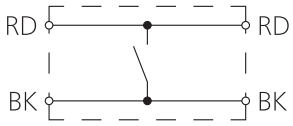 |

**Colour coding**

| | |
|---|---|
| BK | Black |
| RD | Red |

# Connection examples

Legend:

| | |
|---|---|
| SG 2W | evaluation 2-wire technology |
| SG 4L | evaluation 4-wire technology |

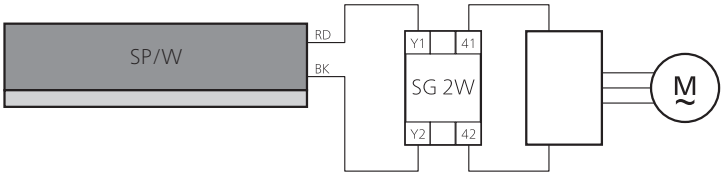


270121 v3.11-RiA

*Subject to technical modifications.*

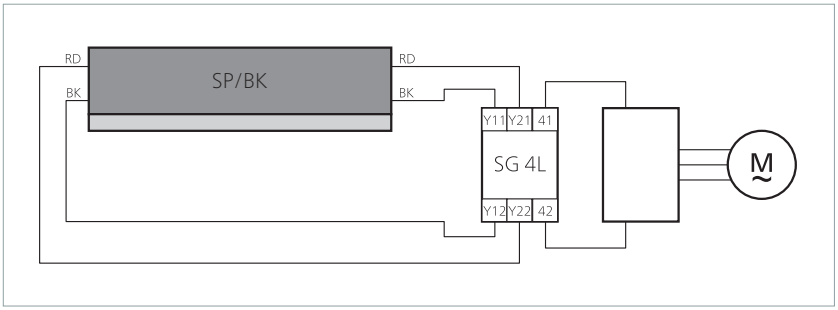


# Sensor surface

## Resistances

The resistance ratings listed below (at a room temperature of 23 °C) require a signal transmitter with an undamaged surface.

### Physical resistance

| | TPE |
|---|---|
| UV-resistance | yes |

### Chemical resistance

The sensor is resistant against normal chemical influences such as diluted acids and alkalis as well as alcohol over an exposure period of 24 hrs.

The specifications in the table are the result of tests conducted in our lab. The suitability of our products for your special area of application must always be verified with your own practical tests.

270121 v3.11-RiA

*Subject to technical modifications.*

| Material | TPE |
|---|---|
| Acetone | - |
| Formic acid | - |
| Armor All | + |
| Car shampoo | + |
| Petrol | - |
| Brake fluid | + |
| Buraton | + |
| Butanol | - |
| Sodium hypochlorite | - |
| Disinfectant 1 % | + |
| Diesel | - |
| Acetic acid 10 % | - |
| Ethanol | + |
| Ethyl acetate | - |
| Ethylene glycol | + |
| Greases | ± |
| Anti-frost agent | + |
| Skin cream | + |
| Icidine | + |
| Incidine | + |
| Incidine plus | + |
| Cooling lubricant | - |
| Plastic cleaner | + |
| Lyso FD 10 | + |
| Metal working oil | - |
| Microbac | + |
| Microbac forte | + |
| Minutil | + |
| Saline solution 5 % | + |
| White spirit (ethyl alcohol) | + |
| Terralin | + |
| Centring oil | - |

**Explanation of symbols:**

+ = resistant
± = resistant to a certain extent
- = not resistant

270121 v3.11-RiA

*Subject to technical modifications.*

# Attachment

The sensors are mounted directly on the hazardous main and secondary closing edges. Special aluminium profiles are used for mounting. The profiles are fastened with screws or rivets.

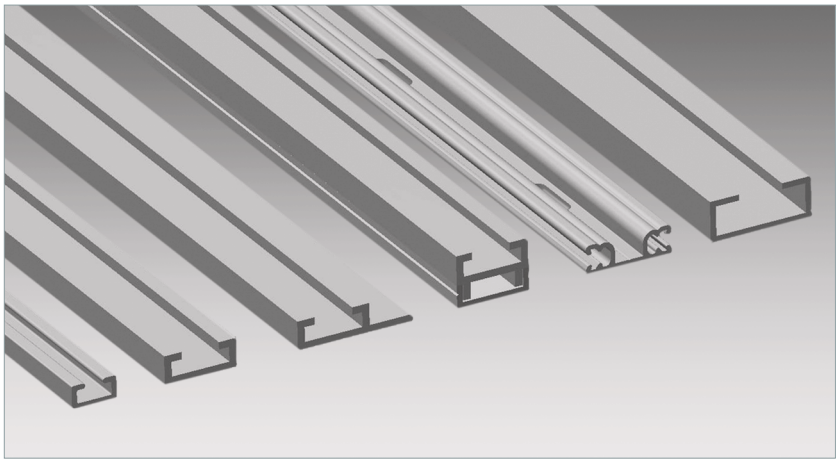

**Material properties**

- AlMgSi0.5 F22
- wall thickness at least
  2.0 mm
  C 15: at least 1.7 mm
  C 30: at least 1.5 mm
- hot hardened
- extruded
- tolerances as per EN 755-9

## Aluminium profiles: Overview of combinations

| Sensor profile foot | | C 15 | C 25<br>C 25M<br>C 25S<br>C 25L | C 26<br>C 26M | C 30 | C 35<br>C 35M<br>C 35S | C 36<br>C 36M<br>C 36S<br>C 36L |
|---|---|---|---|---|---|---|---|
| Snap-in foot (middle) | ...-1 | – | SP 37-1 | – | – | – | – |
| Clip bar (outside) | ...-2 | – | – | SP 37(L)-2 | SP 57(L)-2<br>SP 67-2 | – | SP 87-2 |
| T-foot (middle) | ...-3 | SP 17-3 | SP 37-3 | – | – | SP 57-3 | – |
| T-foot narrow (middle) | ...-4 | – | – | – | – | SP 57(L)-4 | – |

*Subject to technical modifications.*

270121 v3.11-RiA

# Aluminium profiles: Mounting types

**Standard profile**
First the aluminium profile must be mounted onto the closing edge and then the sensor profile clipped into the aluminium profile.

| C 15 | C 25 | C 26 | C 30 | C 35 | C 36 |
|---|---|---|---|---|---|
| | | | | 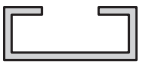 | |

**Two-part profile type M**
For convenient assembly and disassembly. The sensor profile is clipped into the upper section and the upper section inserted into the installed lower section and fastened.

| – | C 25M | C 26M | C 35M | C 36M |
|---|---|---|---|---|
| | 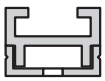 | 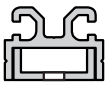 | 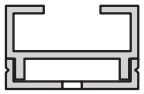 | 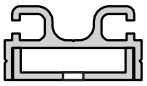 |

**Flange profile type S**
Final assembly is also possible when the sensor profile is already clipped into the aluminium profile.

| – | C 25S | – | C 35S | C 36S |
|---|---|---|---|---|
| | | | | |

**Angle profile type L**
If the closing edge should or must not have assembly holes, this "roundthe-corner" solution is suitable. Final assembly is also possible when the sensor profile is already clipped into the aluminium profile.

| – | C 25L | – | – | C 36L |
|---|---|---|---|---|
| | 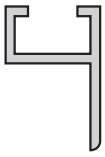 | | | 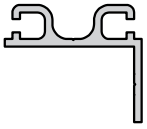 |

270121 v3.11-RiA

*Subject to technical modifications.*

# Aluminium profile: Dimensions

## Standard profile 1:2

C 15

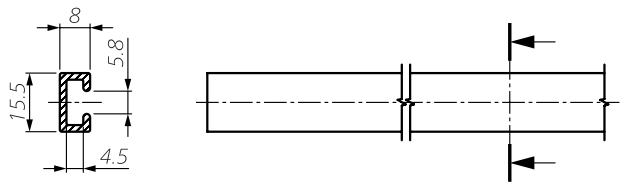


C 26

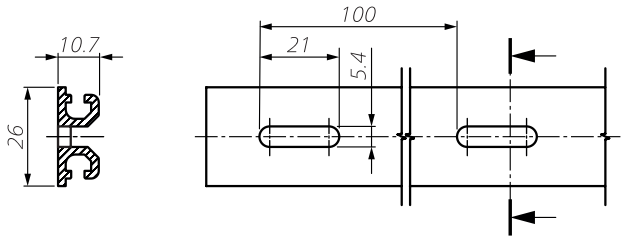


C 25

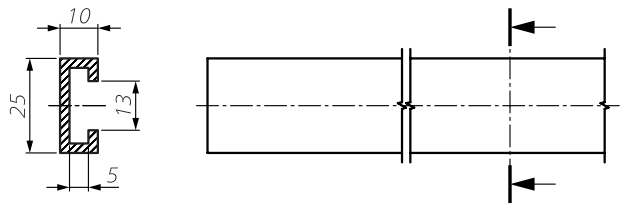


C 30

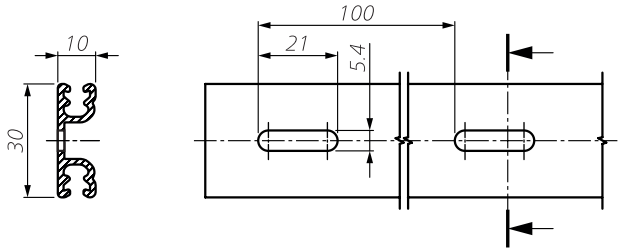


C 35

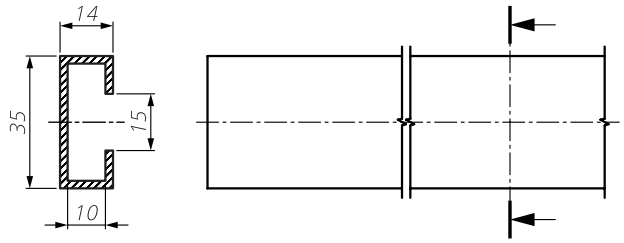


C 36

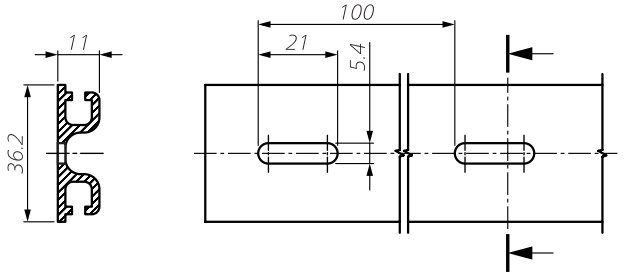


## Two-part profile type M 1:2

C 25M

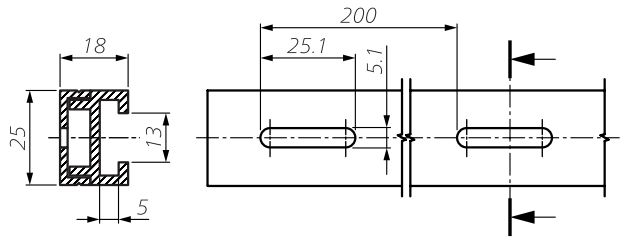


C 26M

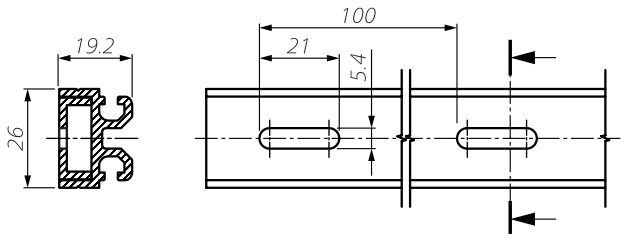


C 35M

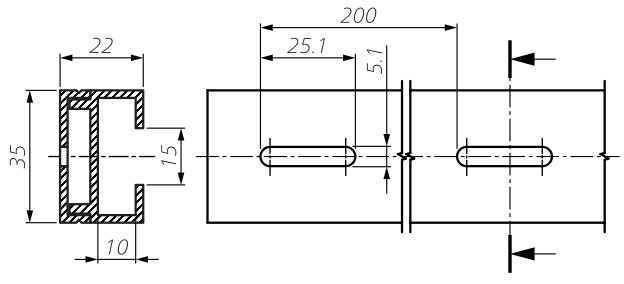


C 36M

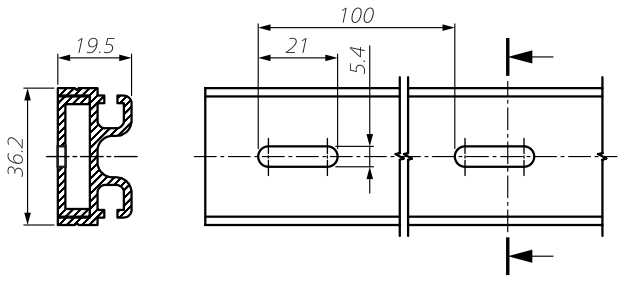


*Subject to technical modifications.*



270121 v3.11-RiA

## Flange profile type S 1:2

C 25S

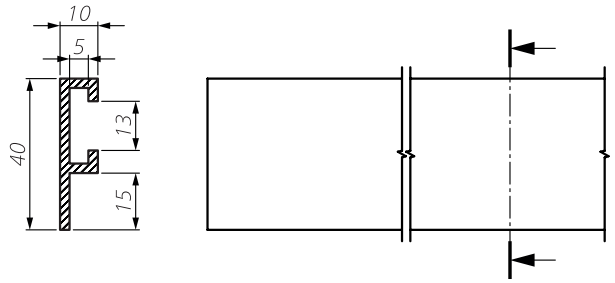


–

C 35S

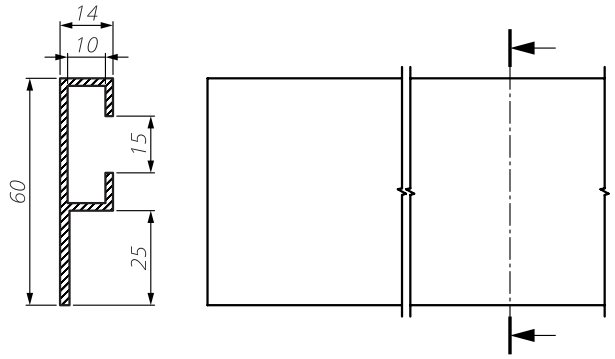


C 36S

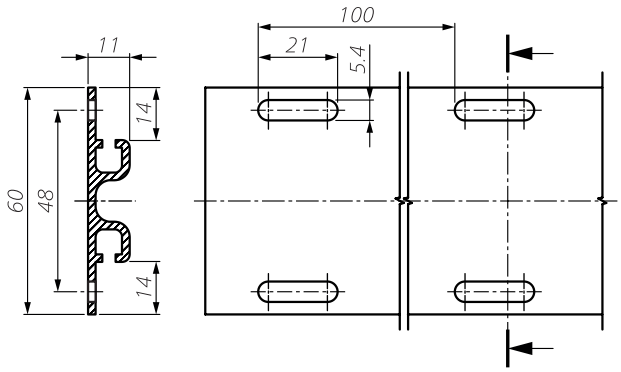


## Angle profile type L 1:2

C 25L

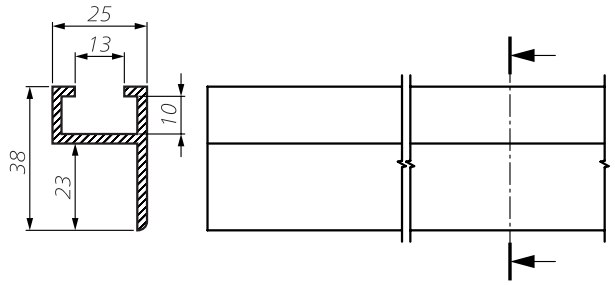


C 36L

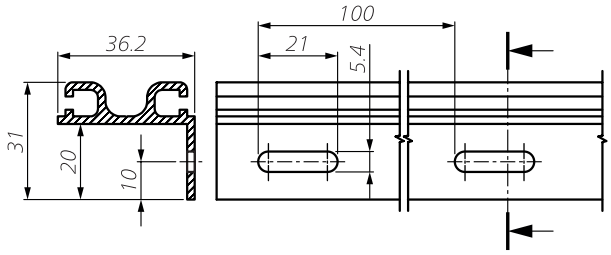


270121 v3.11-RiA

*Subject to technical modifications.*

# SP: The right selection

## Calculation for selection of the safety edge height

$s_1$ = Stopping distance of the dangerous movement [ mm ]
v = Velocity of the dangerous movement [ mm/s ]
T = Follow-through of the complete system [ s ]
$t_1$ = Response time safety edge
$t_2$ = Stopping time of the machine
s = Minimum overtravel distance of the safety edge so that the required limit forces are not exceeded [ mm ]
C = Safety factor; if components susceptible to failures (braking system) exist in the system, a higher factor must be selected

The stopping distance of the dangerous movement is calculated using the following formula:

$s_1 = 1/2 \times v \times T$ where: $T = t_1 + t_2$

In accordance with ISO 13856-2, the minimum overtravel distance of the safety edge is calculated using the following formula:

$s = s_1 \times C$ where: $C = 1{,}2$

A suitable safety edge profile can now be selected based on the result. Overtravel distances of safety edge profiles: see chapter *Technical data*.

## Calculation examples

**Example 1**

The dangerous movement on your machine has a velocity of v = 10 mm/s and can be brought to a standstill within $t_2$ = 200 ms. The relatively low velocity suggests that a short overtravel distance is to be expected. Therefore the sensor profile SP 37-1 TPE could be sufficient. The response time of the safety edge (SP 37-1 TPE + control unit*) is $t_1$ = 600 ms.

$s_1 = 1/2 \times v \times T$ where: $T = t_1 + t_2$
$s_1 = 1/2 \times 10$ mm/s $\times$ (0.6 s + 0.2 s)
**$s_1$ = 1/2 × 10 mm/s × 0.8 s = 4.0 mm**

$s = s_1 \times C$ where: $C = 1.2$
**s** = 4.0 mm × 1.2 **= 4.8 mm**

The safety edge must have a minimum overtravel distance of s = 4.8 mm. The selected SP 37-1 TPE has an overtravel distance of at least 9.2 mm. This is more than the required 4.8 mm.
**Result:** The SP 37-1 TPE is **suitable** for this case.

270121 v3.11-RiA

*Subject to technical modifications.*

* Assumption: Typical reaction time of a control unit = 20 ms

**Example 2**

The same conditions as in calculation example 1 with the exception of the velocity of the dangerous movement. This is now v = 200 mm/s. The response time of the safety edge (SP 37-1 TPE + control unit*) is $t_1$ = 55 ms.

$s_1 = 1/2 \times v \times T$ where: $T = t_1 + t_2$

$s_1 = 1/2 \times 200$ mm/s $\times$ (0.055 s + 0.2 s)

$\mathbf{s_1} = 1/2 \times 200$ mm/s $\times$ 0.255 s **= 25.5 mm**

$s = s_1 \times C$ where: C = 1.2

**s** = 25.5 mm $\times$ 1.2 **= 30.6 mm**

The safety edge must have a minimum overtravel distance of s = 30.6 mm. The selected SP 37-1 TPE has an overtravel distance of at least 3.8 mm. This is less than the required 30.6 mm.

**Result:** The SP 37-1 TPE is **not suitable** for this case.

**Example 3**

The same conditions as in calculation example 2. Instead of SP 37-1 EPDM the SP 67-1 TPE is selected. The response time of the safety edge (SP 67-2 TPE + control unit*) is $t_1$ = 72 ms.

$s_1 = 1/2 \times v \times T$ where: $T = t_1 + t_2$

$s_1 = 1/2 \times 200$ mm/s $\times$ (0.072 s + 0.2 s)

$\mathbf{s_1} = 1/2 \times 200$ mm/s $\times$ 0.272 s **= 27.2 mm**

$s = s_1 \times C$ where: C = 1.2

**s** = 27.2 mm $\times$ 1.2 **= 32.6 mm**

The safety edge must have a minimum overtravel distance of s = 32.6 mm. The selected SP 67-2 TPE has an overtravel distance of at least 36.5 mm. This is more than the required 32.6 mm.

**Result:** The SP 67-2 TPE is **suitable** for this case.

270121 v3.11-RiA

* Assumption: Typical reaction time of a control unit = 20 ms

*Subject to technical modifications.*

# Maintenance and cleaning

The sensors are virtually maintenance-free.
The control unit also monitors the sensor.

### Regular inspection

Depending on the utilisation, sensors must be inspected at regular intervals (at least monthly)

- for proper functioning,
- damage,
- and correct mounting.

### Cleaning

If the sensors become dirty, they can be cleaned with a mild cleaning product.

270121 v3.11-RiA

*Subject to technical modifications.*

# Technical data

## SK SP 17-3 TPE

Sensor profile SP manufactured without end caps.

| **Sensor profile (without control unit)** | **SK SP/W 17-3 TPE or SK SP/BK 17-3 TPE** |
|---|---|
| Test principles | EN 12978, ISO 13849-1, ISO 13856-2 |
| **Switching characteristics at $v_{test}$ = 10 mm/s** | |
| Switching operations | 10,000 |
| Actuation force | |
| Test piece Ø 20 mm | < 50 N |
| Test piece (cylinder) Ø 80 mm | < 150 N |
| Actuation distance | |
| Test piece (cylinder) Ø 80 mm | 1.5 mm |
| Actuation angle | |
| Test piece (cylinder) Ø 80 mm | ±45° |
| Finger detection | yes |
| **Safety classifications** | |
| ISO 13849-1: $B_{10D}$ | 2× $10^6$ |
| **Mechanical operating conditions** | |
| Sensor length (min./max.) | 10 cm / 80 m |
| Cable length (min./max.) | 10 cm / 100 m |
| Bend radii, minimal | |
| $B_1$ / $B_2$ / $B_3$ / $B_4$ | 200 / 200 / 50 / 50 mm |
| Operating speed | |
| (min. / max.) | 10 mm/s / 10 mm/s |
| max. load capacity (signal) | 600 N |
| Tensile load, cable (max.) | 20 N |
| IEC 60529: Degree of protection | IP67 |
| Operating temperature | -25 to +55 °C |
| short-term (15 min) | -40 to +80 °C |
| Storage temperature | -40 to +80 °C |
| Weight | without/with Aluminium profile (Type) |
| SP 17-3 | 0.12 / 0.28 kg/m (C 15) |
| **Electrical operating conditions** | |
| Terminal resistance | 8k2 ±1 % |
| Rated capacity (max.) | 250 mW |
| Contact transition resistance | < 400 Ohm (per sensor) |
| Number of sensors type BK | max. 5 in series (for more information refer to the chapter *Limits*) |
| Switching voltage (max.) | DC 24 V |
| Switching current (min. / max.) | 1 mA / 10 mA |
| Connection cable | Ø 2.9 mm PUR 2× 0.25 mm² |

Bend radii:

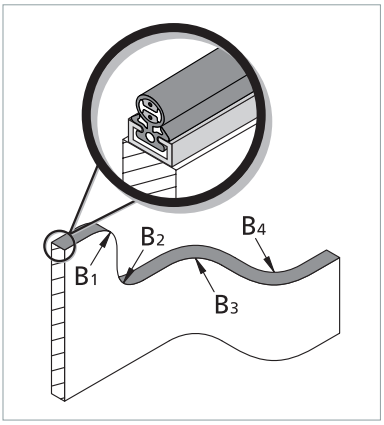


270121 v3.11-RiA

# Dimensions and distances

SP 17-3 TPE (1:1)

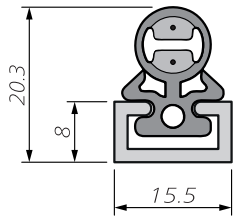


Dimensional tolerances according to ISO 3302 E2/L2.

**Test conditions**

according to ISO 13856-2

- Installation position B
- Temperature +20 °C
- Measurement point c3
- Test sample 1 with Ø 80 mm
- without control unit

All the data given here has been verified by Mayser GmbH & Co. KG.

| | |
|---|---|
| Test speed | **10 mm/s** |
| Actuation force | 38 N |
| Response time | 140 ms |
| Actuation distance (A) | 1.4 mm |
| Overtravel distance | |
| up to 250 N (B1) | 1.4 mm |
| up to 400 N (B2) | 2.3 mm |
| up to 600 N (C) | 4.1 mm |
| Total deformation | 5.5 mm |

**Force-distance ratios**

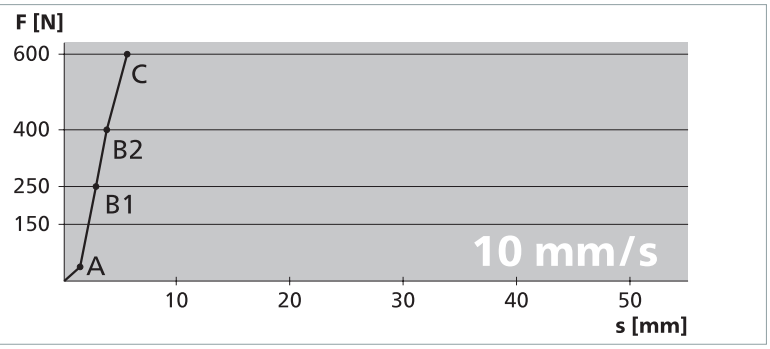


270121 v3.11-RiA

# Technical data

## SK SP 37-1 TPE

Sensor profile SP manufactured with or without end caps.

| **Sensor profile (without control unit)** | **SK SP/W 37-1 TPE or SK SP/BK 37-1 TPE** |
|---|---|
| Test principles | EN 12978, ISO 13849-1, ISO 13856-2 |
| **Switching characteristics at $v_{test}$ = 100 mm/s** | |
| Switching operations | 10,000 |
| Actuation force | |
| Test piece Ø 20 mm | < 50 N |
| Test piece (cylinder) Ø 80 mm | < 150 N |
| Actuation distance | |
| Test piece (cylinder) Ø 80 mm | 6 mm |
| Actuation angle | |
| Test piece (cylinder) Ø 80 mm | ±50° |
| Finger detection | yes |
| **Safety classifications** | |
| ISO 13849-1: $B_{10D}$ | 2× $10^6$ |
| **Mechanical operating conditions** | |
| Sensor length (min./max.) | 10 cm / 30 m |
| Cable length (min./max.) | 10 cm / 100 m |
| Bend radii, minimal | |
| $B_1$ / $B_2$ / $B_3$ / $B_4$ | 500 / 500 / 200 / 200 mm |
| Operating speed | |
| (min. / max.) | 10 mm/s / 200 mm/s |
| max. load capacity (signal) | 600 N |
| Tensile load, cable (max.) | 20 N |
| IEC 60529: Degree of protection | IP67 |
| Operating temperature | -25 to +55 °C |
| short-term (15 min) | -40 to +80 °C |
| Storage temperature | -40 to +80 °C |
| Weight | without/with Aluminium profile (Type) |
| SP 37-1 | 0.33 / 0.64 kg/m (C 25) |
| **Electrical operating conditions** | |
| Terminal resistance | 8k2 ±1 % |
| Rated capacity (max.) | 250 mW |
| Contact transition resistance | < 400 Ohm (per sensor) |
| Number of sensors type BK | max. 5 in series (for more information refer to the chapter *Limits*) |
| Switching voltage (max.) | DC 24 V |
| Switching current (min. / max.) | 1 mA / 10 mA |
| Connection cable | Ø 2.9 mm PUR 2× 0.25 mm² |

Bend radii:

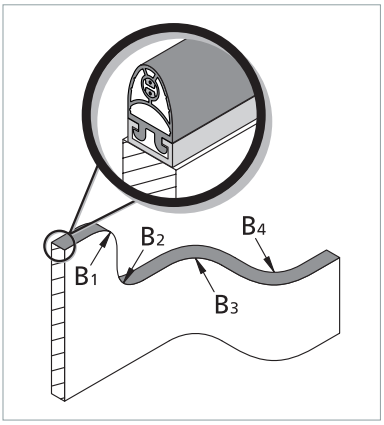


270121 v3.11-RiA

# Dimensions and distances

SP 37-1 TPE (1:2)

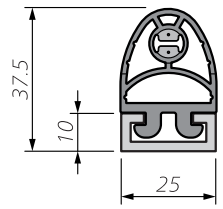


Dimensional tolerances according to ISO 3302 E2/L2.

**Test conditions**

according to ISO 13856-2

- Installation position B
- Temperature +20 °C
- Measurement point c3
- Test sample 1 with Ø 80 mm
- without control unit

All data stated here is documented in EC design type test certificates.

## Force-distance ratios

| | |
|---|---|
| Test speed | **10 mm/s** |
| Actuation force | 42 N |
| Response time | 580 ms |
| Actuation distance (A) | 5.8 mm |
| Overtravel distance | |
| up to 250 N (B1) | 9.2 mm |
| up to 400 N (B2) | 11.1 mm |
| up to 600 N (C) | 13.0 mm |
| Total deformation | 18.8 mm |

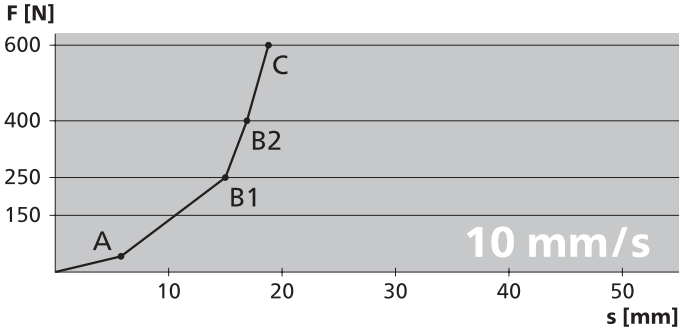


| | |
|---|---|
| Test speed | **100 mm/s** |
| Actuation force | 50 N |
| Response time | 58 ms |
| Actuation distance (A) | 5.8 mm |
| Overtravel distance | |
| up to 250 N (B1) | 8.7 mm |
| up to 400 N (B2) | 10.5 mm |
| up to 600 N (C) | 12.5 mm |
| Total deformation | 18.3 mm |

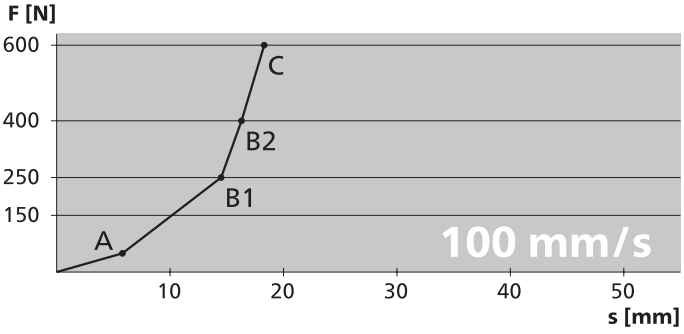


| | |
|---|---|
| Test speed | **200 mm/s** |
| Actuation force | 54 N |
| Response time | 35 ms |
| Actuation distance (A) | 7.0 mm |
| Overtravel distance | |
| up to 250 N (B1) | 3.8 mm |
| up to 400 N (B2) | 7.6 mm |
| up to 600 N (C) | 12.9 mm |
| Total deformation | 19.9 mm |

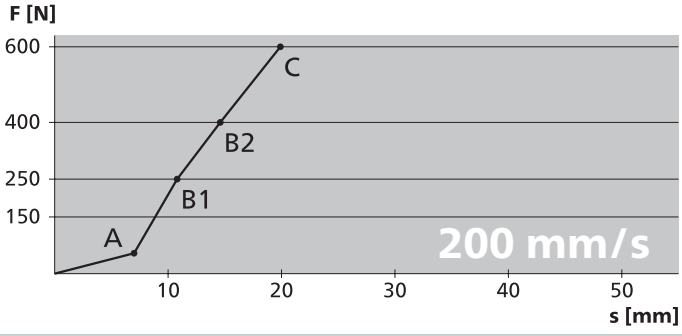


270121 v3.11-RiA

# Technical data

## SK SP 37(L)-2 TPE

Sensor profile SP manufactured with end caps.

| **Sensor profile (without control unit)** | **SK SP/W 37(L)-2 TPE or SK SP/BK 37(L)-2 TPE** |
|---|---|
| Test principles | EN 12978, ISO 13849-1, ISO 13856-2 |
| **Switching characteristics at $v_{test}$ = 100 mm/s** | |
| Switching operations | 10,000 |
| Actuation force | |
| Test piece Ø 20 mm | < 50 N |
| Test piece (cylinder) Ø 80 mm | < 150 N |
| Actuation distance | |
| Test piece (cylinder) Ø 80 mm | 6 mm |
| Actuation angle | |
| Test piece (cylinder) Ø 80 mm | ±50° |
| Finger detection | yes |
| **Safety classifications** | |
| ISO 13849-1: $B_{10D}$ | 2× $10^6$ |
| **Mechanical operating conditions** | |
| Sensor length (min./max.) | 10 cm / 30 m |
| Cable length (min./max.) | 10 cm / 100 m |
| Bend radii, minimal | |
| $B_1$ / $B_2$ / $B_3$ / $B_4$ | 500 / 500 / 200 / 200 mm |
| Operating speed | |
| (min. / max.) | 10 mm/s / 200 mm/s |
| max. load capacity (signal) | 600 N |
| Tensile load, cable (max.) | 20 N |
| IEC 60529: Degree of protection | IP67 |
| Operating temperature | -25 to +55 °C |
| short-term (15 min) | -40 to +80 °C |
| Storage temperature | -40 to +80 °C |
| Weight | without/with Aluminium profile (Type) |
| SP 37-2 | 0.36 / 0.69 kg/m (C 26) |
| SP 37L-2 | 0.41 / 0.74 kg/m (C 26) |
| **Electrical operating conditions** | |
| Terminal resistance | 8k2 ±1 % |
| Rated capacity (max.) | 250 mW |
| Contact transition resistance | < 400 Ohm (per sensor) |
| Number of sensors type BK | max. 5 in series (for more information refer to the chapter *Limits*) |
| Switching voltage (max.) | DC 24 V |
| Switching current (min. / max.) | 1 mA / 10 mA |
| Connection cable | Ø 2.9 mm PUR 2× 0.25 $mm^2$ |

Bend radii:

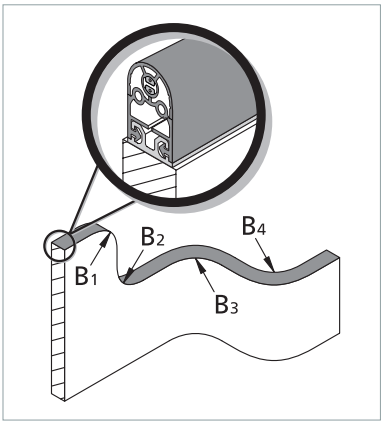


270121 v3.11-RiA

# Dimensions and distances

SP 37-2 TPE (1:2)

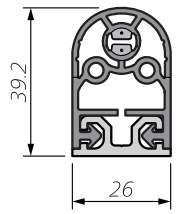


Dimensional tolerances according to ISO 3302 E2/L2.

SP 37L-2 TPE (1:2)

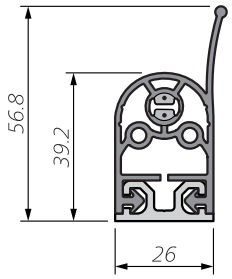


Dimensional tolerances according to ISO 3302 E2/L2.

**Test conditions**

according to ISO 13856-2

- Installation position B
- Temperature +20 °C
- Measurement point c3
- Test sample 1 with Ø 80 mm
- without control unit
- Lip not taken into account

All data stated here is documented in EC design type test certificates.

## Force-distance ratios

| | |
|---|---|
| Test speed | **10 mm/s** |
| Actuation force | 42 N |
| Response time | 580 ms |
| Actuation distance (A) | 5.8 mm |
| Overtravel distance | |
| up to 250 N (B1) | 9.2 mm |
| up to 400 N (B2) | 11.1 mm |
| up to 600 N (C) | 13.0 mm |
| Total deformation | 18.8 mm |

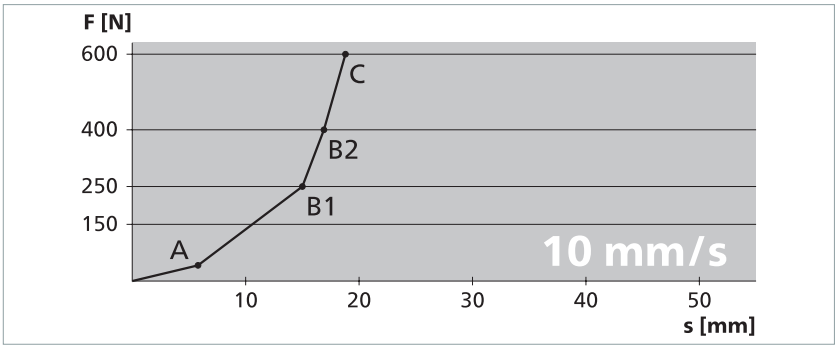


| | |
|---|---|
| Test speed | **100 mm/s** |
| Actuation force | 50 N |
| Response time | 58 ms |
| Actuation distance (A) | 5.8 mm |
| Overtravel distance | |
| up to 250 N (B1) | 8.7 mm |
| up to 400 N (B2) | 10.5 mm |
| up to 600 N (C) | 12.5 mm |
| Total deformation | 18.3 mm |

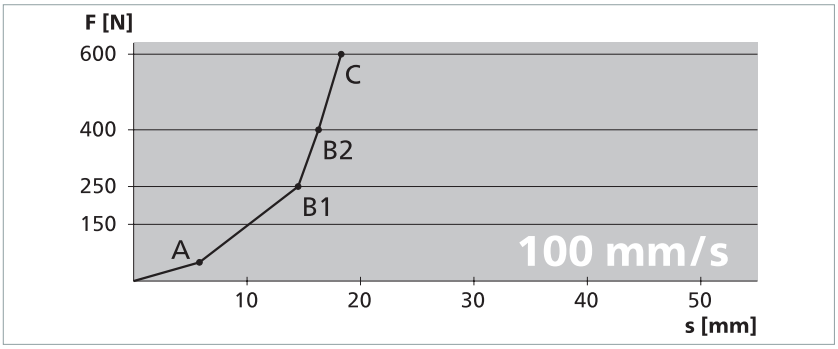


| | |
|---|---|
| Test speed | **200 mm/s** |
| Actuation force | 54 N |
| Response time | 35 ms |
| Actuation distance (A) | 7.0 mm |
| Overtravel distance | |
| up to 250 N (B1) | 3.8 mm |
| up to 400 N (B2) | 7.6 mm |
| up to 600 N (C) | 12.9 mm |
| Total deformation | 19.9 mm |

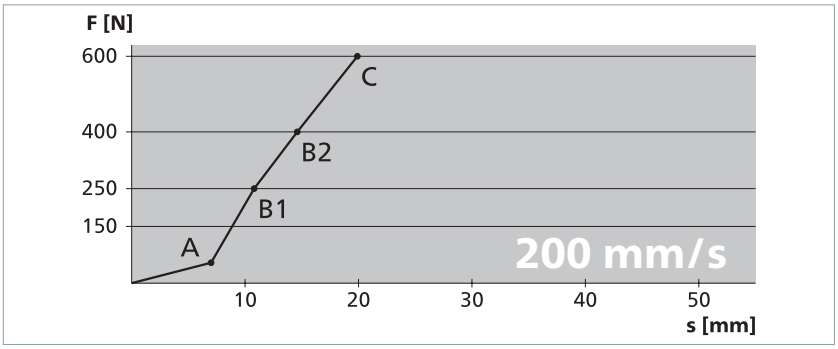


270121 v3.11-RiA

# Technical data

## SK SP 37-3 TPE

Sensor profile SP manufactured with end caps.

| **Sensor profile (without control unit)** | **SK SP/W 37-3 TPE or SK SP/BK 37-3 TPE** |
|---|---|
| Test principles | EN 12978, ISO 13849-1, ISO 13856-2 |
| **Switching characteristics at $v_{test}$ = 100 mm/s** | |
| Switching operations | 10,000 |
| Actuation force | |
| Test piece Ø 20 mm | < 50 N |
| Test piece (cylinder) Ø 80 mm | < 150 N |
| Actuation distance | |
| Test piece (cylinder) Ø 80 mm | 6 mm |
| Actuation angle | |
| Test piece (cylinder) Ø 80 mm | ±50° |
| Finger detection | yes |
| **Safety classifications** | |
| ISO 13849-1: $B_{10D}$ | 2× $10^6$ |
| **Mechanical operating conditions** | |
| Sensor length (min./max.) | 10 cm / 30 m |
| Cable length (min./max.) | 10 cm / 100 m |
| Bend radii, minimal | |
| $B_1$ / $B_2$ / $B_3$ / $B_4$ | 500 / 500 / 200 / 200 mm |
| Operating speed | |
| (min. / max.) | 10 mm/s / 200 mm/s |
| max. load capacity (signal) | 600 N |
| Tensile load, cable (max.) | 20 N |
| IEC 60529: Degree of protection | IP67 |
| Operating temperature | -25 to +55 °C |
| short-term (15 min) | -40 to +80 °C |
| Storage temperature | -40 to +80 °C |
| Weight | without/with Aluminium profile (Type) |
| SP 37-3 | 0.34 / 0.66 kg/m (C 25) |
| **Electrical operating conditions** | |
| Terminal resistance | 8k2 ±1 % |
| Rated capacity (max.) | 250 mW |
| Contact transition resistance | < 400 Ohm (per sensor) |
| Number of sensors type BK | max. 5 in series (for more information refer to the chapter *Limits*) |
| Switching voltage (max.) | DC 24 V |
| Switching current (min. / max.) | 1 mA / 10 mA |
| Connection cable | Ø 2.9 mm PUR 2× 0.25 mm² |

Bend radii:

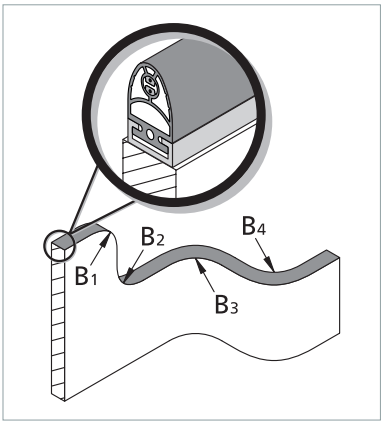


270121 v3.11-RiA

# Dimensions and distances

SP 37-3 TPE (1:2)

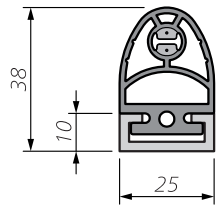


Dimensional tolerances according to ISO 3302 E2/L2.

**Test conditions**

according to ISO 13856-2

- Installation position B
- Temperature +20 °C
- Measurement point c3
- Test sample 1 with Ø 80 mm
- without control unit

All data stated here is documented in EC design type test certificates.

## Force-distance ratios

| | |
|---|---|
| Test speed | **10 mm/s** |
| Actuation force | 42 N |
| Response time | 580 ms |
| Actuation distance (A) | 5.8 mm |
| Overtravel distance | |
| up to 250 N (B1) | 9.2 mm |
| up to 400 N (B2) | 11.1 mm |
| up to 600 N (C) | 13.0 mm |
| Total deformation | 18.8 mm |

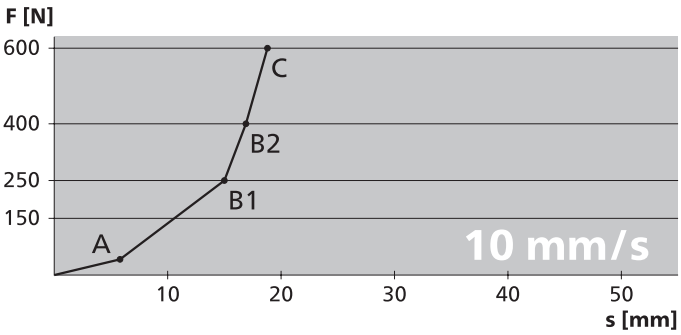


| | |
|---|---|
| Test speed | **100 mm/s** |
| Actuation force | 50 N |
| Response time | 58 ms |
| Actuation distance (A) | 5.8 mm |
| Overtravel distance | |
| up to 250 N (B1) | 8.7 mm |
| up to 400 N (B2) | 10.5 mm |
| up to 600 N (C) | 12.5 mm |
| Total deformation | 18.3 mm |

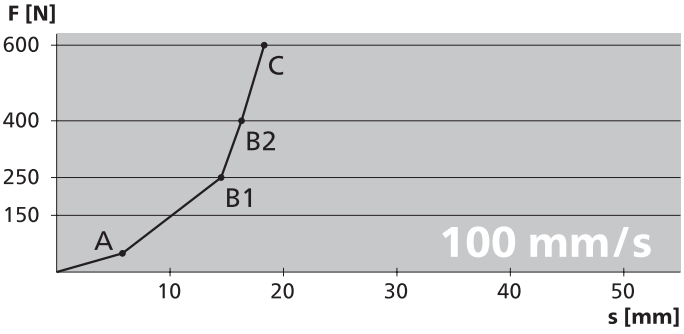


| | |
|---|---|
| Test speed | **200 mm/s** |
| Actuation force | 54 N |
| Response time | 35 ms |
| Actuation distance (A) | 7.0 mm |
| Overtravel distance | |
| up to 250 N (B1) | 3.8 mm |
| up to 400 N (B2) | 7.6 mm |
| up to 600 N (C) | 12.9 mm |
| Total deformation | 19.9 mm |

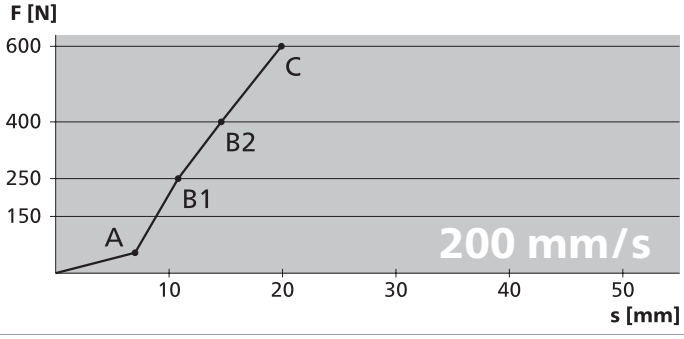


270121 v3.11-RiA

# Technical data

## SK SP 57(L)-2 TPE

Sensor profile SP manufactured with end caps.

| **Sensor profile (without control unit)** | **SK SP/W 57(L)-2 TPE or SK SP/BK 57(L)-2 TPE** |
|---|---|
| Test principles | EN 12978, ISO 13849-1, ISO 13856-2 |
| **Switching characteristics at $v_{test}$ = 100 mm/s** | |
| Switching operations | 10,000 |
| Actuation force | |
| Test piece Ø 20 mm | < 50 N |
| Test piece (cylinder) Ø 80 mm | < 150 N |
| Actuation distance | |
| Test piece (cylinder) Ø 80 mm | 8 mm |
| Actuation angle | |
| Test piece (cylinder) Ø 80 mm | ±45° |
| Finger detection | yes |
| **Safety classifications** | |
| ISO 13849-1: $B_{10D}$ | 2× $10^6$ |
| **Mechanical operating conditions** | |
| Sensor length (min./max.) | 10 cm / 30 m |
| Cable length (min./max.) | 10 cm / 100 m |
| Bend radii, minimal | |
| $B_1$ / $B_2$ / $B_3$ / $B_4$ | 1000 / 1000 / 200 / 200 mm |
| Operating speed | |
| (min. / max.) | 10 mm/s / 200 mm/s |
| max. load capacity (signal) | 600 N |
| Tensile load, cable (max.) | 20 N |
| IEC 60529: Degree of protection | IP67 |
| Operating temperature | -25 to +55 °C |
| short-term (15 min) | -40 to +80 °C |
| Storage temperature | -40 to +80 °C |
| Weight | without/with Aluminium profile (Type) |
| SP 57-2 | 0.44 / 0.74 kg/m (C 30) |
| SP 57L-2 | 0.47 / 0.77 kg/m (C 30) |
| **Electrical operating conditions** | |
| Terminal resistance | 8k2 ±1 % |
| Rated capacity (max.) | 250 mW |
| Contact transition resistance | < 400 Ohm (per sensor) |
| Number of sensors type BK | max. 5 in series (for more information refer to the chapter *Limits*) |
| Switching voltage (max.) | DC 24 V |
| Switching current (min. / max.) | 1 mA / 10 mA |
| Connection cable | Ø 2.9 mm PUR 2× 0.25 mm² |

Bend radii:

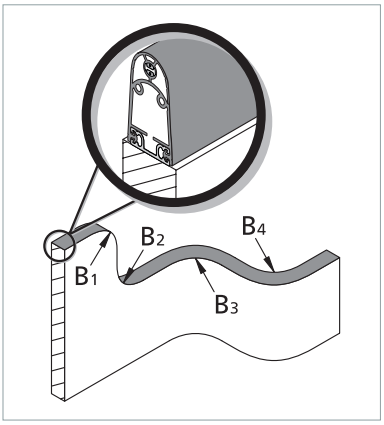


270121 v3.11-RiA

# Dimensions and distances

SP 57-2 TPE (1:2)

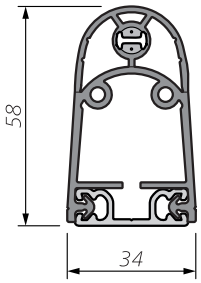


Dimensional tolerances according to ISO 3302 E2/L2.

SP 57L-2 TPE (1:2)

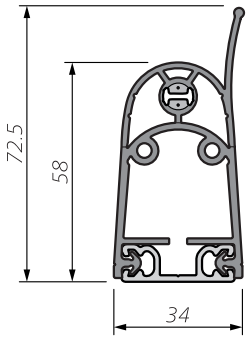


Dimensional tolerances according to ISO 3302 E2/L2.

**Test conditions**

according to ISO 13856-2

- Installation position B
- Temperature +20 °C
- Measurement point c3
- Test sample 1 with Ø 80 mm
- without control unit
- Lip not taken into account

All data stated here is documented in EC design type test certificates.

## Force-distance ratios

| | |
|---|---|
| Test speed | **10 mm/s** |
| Actuation force | 48 N |
| Response time | 910 ms |
| Actuation distance (A) | 9.1 mm |
| Overtravel distance | |
| up to 250 N (B1) | 24.5 mm |
| up to 400 N (B2) | 29.3 mm |
| up to 600 N (C) | 31.0 mm |
| Total deformation | 40.1 mm |

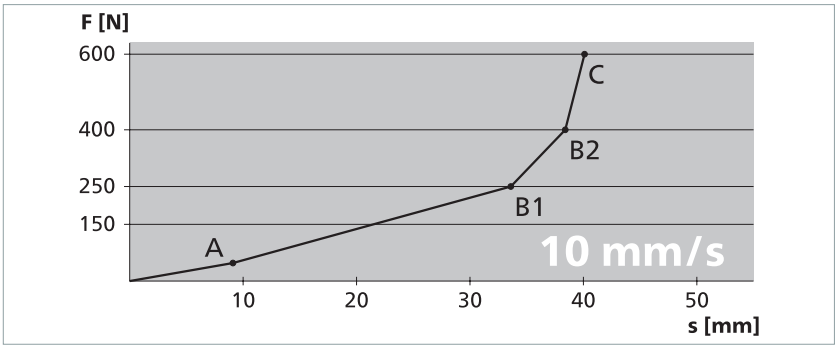


| | |
|---|---|
| Test speed | **100 mm/s** |
| Actuation force | 41 N |
| Response time | 80 ms |
| Actuation distance (A) | 8.0 mm |
| Overtravel distance | |
| up to 250 N (B1) | 26.0 mm |
| up to 400 N (B2) | 29.4 mm |
| up to 600 N (C) | 31.5 mm |
| Total deformation | 39.5 mm |

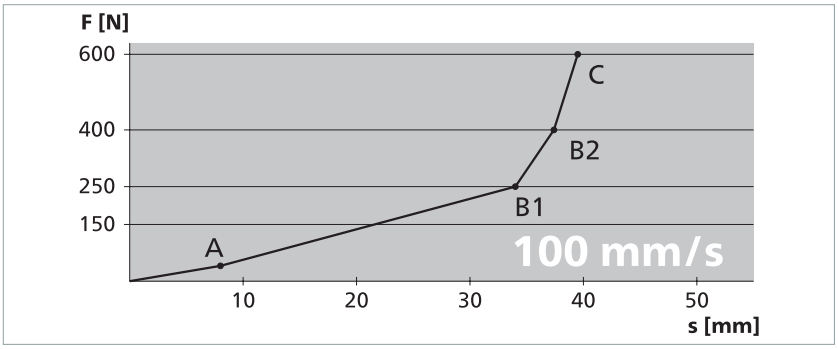


| | |
|---|---|
| Test speed | **200 mm/s** |
| Actuation force | 58 N |
| Response time | 71 ms |
| Actuation distance (A) | 14.2 mm |
| Overtravel distance | |
| up to 250 N (B1) | 20.8 mm |
| up to 400 N (B2) | 23.7 mm |
| up to 600 N (C) | 25.9 mm |
| Total deformation | 40.1 mm |

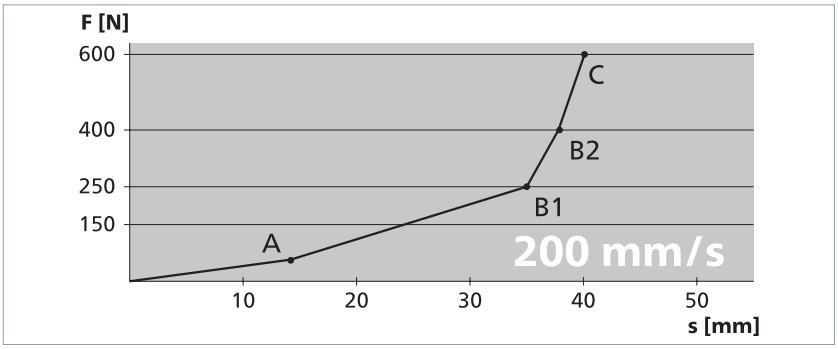


270121 v3.11-RiA

# Technical data

## SK SP 57-3 TPE

Sensor profile SP manufactured with end caps.

| **Sensor profile (without control unit)** | **SK SP/W 57-3 TPE or SK SP/BK 57-3 TPE** |
|---|---|
| Test principles | EN 12978, ISO 13849-1, ISO 13856-2 |
| **Switching characteristics at $v_{test}$ = 100 mm/s** | |
| Switching operations | 10,000 |
| Actuation force | |
| Test piece Ø 20 mm | < 50 N |
| Test piece (cylinder) Ø 80 mm | < 150 N |
| Actuation distance | |
| Test piece (cylinder) Ø 80 mm | 8 mm |
| Actuation angle | |
| Test piece (cylinder) Ø 80 mm | ±45° |
| Finger detection | yes |
| **Safety classifications** | |
| ISO 13849-1: $B_{10D}$ | 2× $10^6$ |
| **Mechanical operating conditions** | |
| Sensor length (min./max.) | 10 cm / 25 m |
| Cable length (min./max.) | 10 cm / 100 m |
| Bend radii, minimal | |
| $B_1$ / $B_2$ / $B_3$ / $B_4$ | 1000 / 1000 / 200 / 200 mm |
| Operating speed | |
| (min. / max.) | 10 mm/s / 200 mm/s |
| max. load capacity (signal) | 600 N |
| Tensile load, cable (max.) | 20 N |
| IEC 60529: Degree of protection | IP67 |
| Operating temperature | -25 to +55 °C |
| short-term (15 min) | -40 to +80 °C |
| Storage temperature | -40 to +80 °C |
| Weight | without/with Aluminium profile (Type) |
| SP 57-3 | 0.60 / 1.00 kg/m (C 35) |
| **Electrical operating conditions** | |
| Terminal resistance | 8k2 ±1 % |
| Rated capacity (max.) | 250 mW |
| Contact transition resistance | < 400 Ohm (per sensor) |
| Number of sensors type BK | max. 5 in series (for more information refer to the chapter *Limits*) |
| Switching voltage (max.) | DC 24 V |
| Switching current (min. / max.) | 1 mA / 10 mA |
| Connection cable | Ø 2.9 mm PUR 2× 0.25 mm² |

Bend radii:

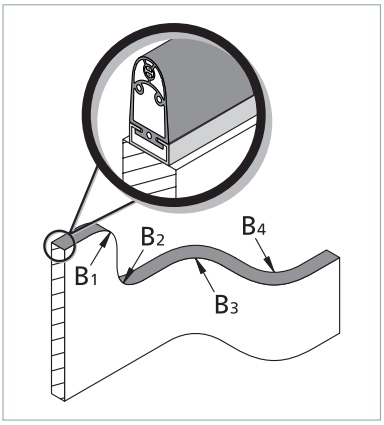


270121 v3.11-RiA

# Dimensions and distances

SP 57-3 TPE (1:2)

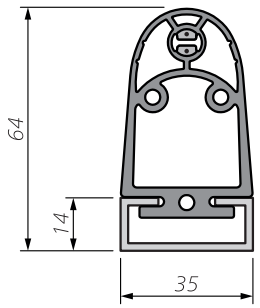


Dimensional tolerances according to ISO 3302 E2/L2.

**Test conditions**

according to ISO 13856-2

- Installation position B
- Temperature +20 °C
- Measurement point c3
- Test sample 1 with Ø 80 mm
- without control unit

All data stated here is documented in EC design type test certificates.

## Force-distance ratios

| | |
|---|---|
| Test speed | **10 mm/s** |
| Actuation force | 48 N |
| Response time | 910 ms |
| Actuation distance (A) | 9.1 mm |
| Overtravel distance | |
| up to 250 N (B1) | 24.5 mm |
| up to 400 N (B2) | 29.3 mm |
| up to 600 N (C) | 31.0 mm |
| Total deformation | 40.1 mm |

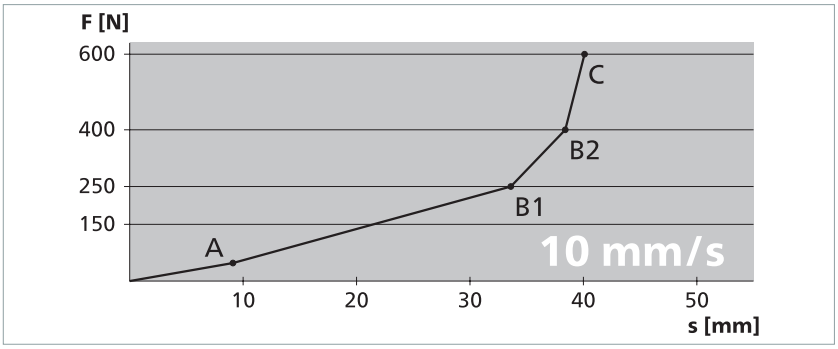


| | |
|---|---|
| Test speed | **100 mm/s** |
| Actuation force | 41 N |
| Response time | 80 ms |
| Actuation distance (A) | 8.0 mm |
| Overtravel distance | |
| up to 250 N (B1) | 26.0 mm |
| up to 400 N (B2) | 29.4 mm |
| up to 600 N (C) | 31.5 mm |
| Total deformation | 39.5 mm |

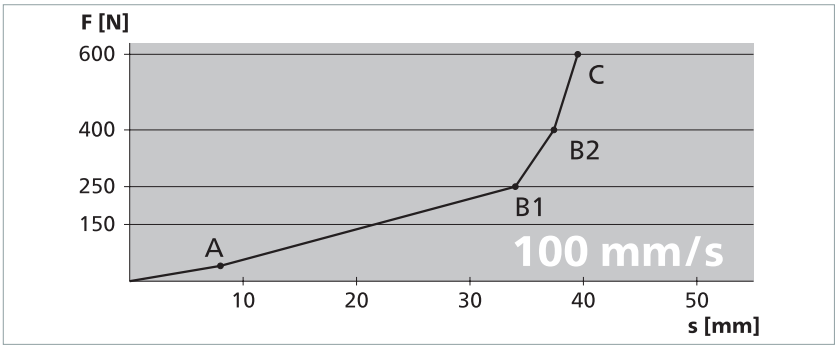


| | |
|---|---|
| Test speed | **200 mm/s** |
| Actuation force | 58 N |
| Response time | 71 ms |
| Actuation distance (A) | 14.2 mm |
| Overtravel distance | |
| up to 250 N (B1) | 20.8 mm |
| up to 400 N (B2) | 23.7 mm |
| up to 600 N (C) | 25.9 mm |
| Total deformation | 40.1 mm |

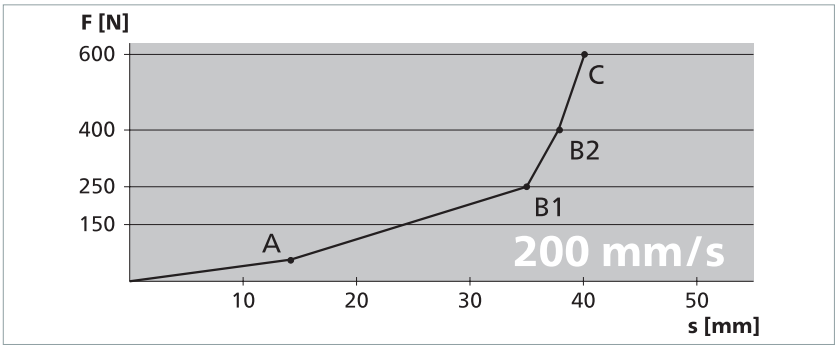


270121 v3.11-RiA

# Technical data

## SK SP 57(L)-4 TPE

Sensor profile SP manufactured with end caps.

| **Sensor profile (without control unit)** | **SK SP/W 57(L)-4 TPE or SK SP/BK 57(L)-4 TPE** |
|---|---|
| Test principles | EN 12978, ISO 13849-1, ISO 13856-2 |
| **Switching characteristics at $v_{test}$ = 100 mm/s** | |
| Switching operations | 10,000 |
| Actuation force | |
| Test piece Ø 20 mm | < 50 N |
| Test piece (cylinder) Ø 80 mm | < 150 N |
| Actuation distance | |
| Test piece (cylinder) Ø 80 mm | 8 mm |
| Actuation angle | |
| Test piece (cylinder) Ø 80 mm | ±45° |
| Finger detection | yes |
| **Safety classifications** | |
| ISO 13849-1: $B_{10D}$ | 2× $10^6$ |
| **Mechanical operating conditions** | |
| Sensor length (min./max.) | 10 cm / 25 m |
| Cable length (min./max.) | 10 cm / 100 m |
| Bend radii, minimal | |
| $B_1$ / $B_2$ / $B_3$ / $B_4$ | 1000 / 1000 / 200 / 200 mm |
| Operating speed | |
| (min. / max.) | 10 mm/s / 200 mm/s |
| max. load capacity (signal) | 600 N |
| Tensile load, cable (max.) | 20 N |
| IEC 60529: Degree of protection | IP67 |
| Operating temperature | -25 to +55 °C |
| short-term (15 min) | -40 to +80 °C |
| Storage temperature | -40 to +80 °C |
| Weight | without/with Aluminium profile (Type) |
| SP 57-4 | 0.58 / 0.99 kg/m (C 35) |
| SP 57L-4 | 0.62 / 1.03 kg/m (C 35) |
| **Electrical operating conditions** | |
| Terminal resistance | 8k2 ±1 % |
| Rated capacity (max.) | 250 mW |
| Contact transition resistance | < 400 Ohm (per sensor) |
| Number of sensors type BK | max. 5 in series (for more information refer to the chapter *Limits*) |
| Switching voltage (max.) | DC 24 V |
| Switching current (min. / max.) | 1 mA / 10 mA |
| Connection cable | Ø 2.9 mm PUR 2× 0.25 mm² |

Bend radii:

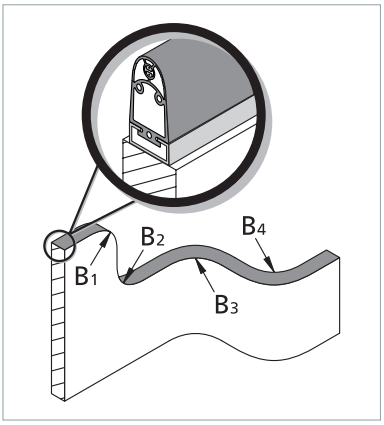


270121 v3.11-RiA

# Dimensions and distances

SP 57-4 TPE (1:2)

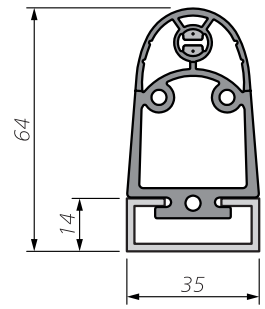


Dimensional tolerances according to ISO 3302 E2/L2.

SP 57L-4 TPE (1:2)

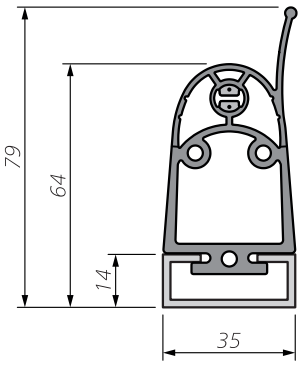


Dimensional tolerances according to ISO 3302 E2/L2.

**Test conditions**

according to ISO 13856-2

- Installation position B
- Temperature +20 °C
- Measurement point c3
- Test sample 1 with Ø 80 mm
- without control unit
- Lip not taken into account

All data stated here is documented in EC design type test certificates.

## Force-distance ratios

| | |
|---|---|
| Test speed | **10 mm/s** |
| Actuation force | 48 N |
| Response time | 910 ms |
| Actuation distance (A) | 9.1 mm |
| Overtravel distance | |
| up to 250 N (B1) | 24.5 mm |
| up to 400 N (B2) | 29.3 mm |
| up to 600 N (C) | 31.0 mm |
| Total deformation | 40.1 mm |

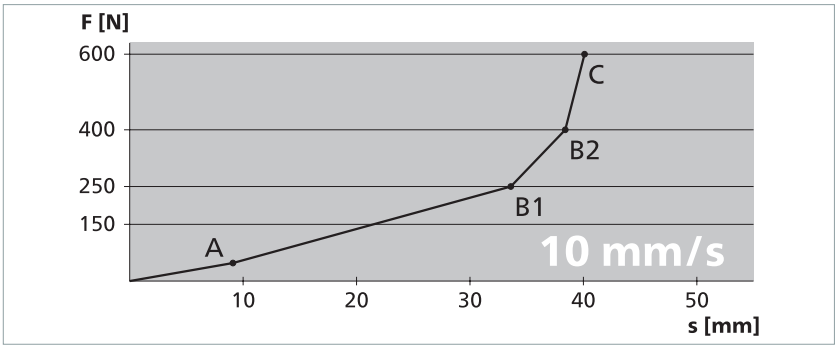


| | |
|---|---|
| Test speed | **100 mm/s** |
| Actuation force | 41 N |
| Response time | 80 ms |
| Actuation distance (A) | 8.0 mm |
| Overtravel distance | |
| up to 250 N (B1) | 26.0 mm |
| up to 400 N (B2) | 29.4 mm |
| up to 600 N (C) | 31.5 mm |
| Total deformation | 39.5 mm |

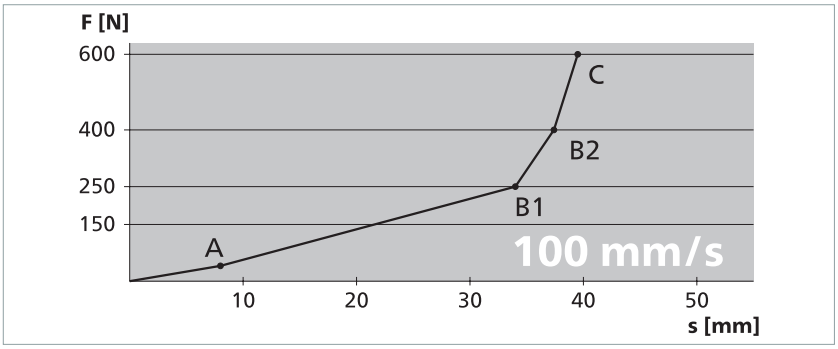


| | |
|---|---|
| Test speed | **200 mm/s** |
| Actuation force | 58 N |
| Response time | 71 ms |
| Actuation distance (A) | 14.2 mm |
| Overtravel distance | |
| up to 250 N (B1) | 20.8 mm |
| up to 400 N (B2) | 23.7 mm |
| up to 600 N (C) | 25.9 mm |
| Total deformation | 40.1 mm |

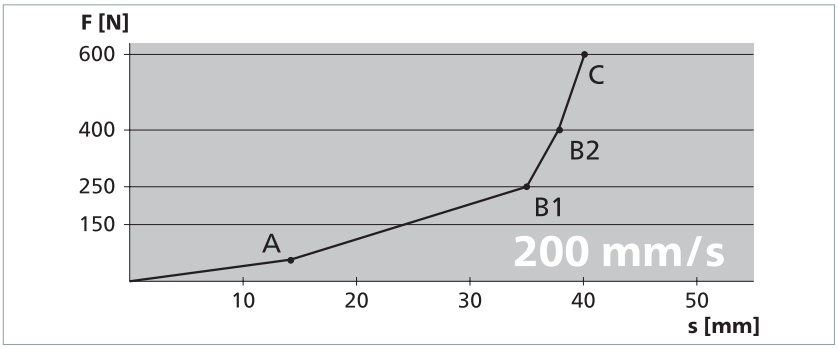


270121 v3.11-RiA

# Technical data

## SK SP 67-2 TPE

Sensor profile SP manufactured with end caps.

| **Sensor profile (without control unit)** | **SK SP/W 67-2 TPE or SK SP/BK 67-2 TPE** |
|---|---|
| Test principles | EN 12978, ISO 13849-1, ISO 13856-2 |
| **Switching characteristics at $v_{test}$ = 100 mm/s** | |
| Switching operations | 10,000 |
| Actuation force | |
| Test piece Ø 20 mm | < 50 N |
| Test piece (cylinder) Ø 80 mm | < 150 N |
| Actuation distance | |
| Test piece (cylinder) Ø 80 mm | 11 mm |
| Actuation angle | |
| Test piece (cylinder) Ø 80 mm | ±45° |
| Finger detection | yes |
| **Safety classifications** | |
| ISO 13849-1: $B_{10D}$ | 2× $10^6$ |
| **Mechanical operating conditions** | |
| Sensor length (min./max.) | 10 cm / 30 m |
| Cable length (min./max.) | 10 cm / 100 m |
| Bend radii, minimal | |
| $B_1$ / $B_2$ / $B_3$ / $B_4$ | 1000 / 1000 / 200 / 200 mm |
| Operating speed | |
| (min. / max.) | 10 mm/s / 200 mm/s |
| max. load capacity (signal) | 600 N |
| Tensile load, cable (max.) | 20 N |
| IEC 60529: Degree of protection | IP67 |
| Operating temperature | -25 to +55 °C |
| short-term (15 min) | -40 to +80 °C |
| Storage temperature | -40 to +80 °C |
| Weight | without/with Aluminium profile (Type) |
| SP 67-2 | 0.49 / 0.79 kg/m (C 30) |
| **Electrical operating conditions** | |
| Terminal resistance | 8k2 ±1 % |
| Rated capacity (max.) | 250 mW |
| Contact transition resistance | < 400 Ohm (per sensor) |
| Number of sensors type BK | max. 5 in series (for more information refer to the chapter *Limits*) |
| Switching voltage (max.) | DC 24 V |
| Switching current (min. / max.) | 1 mA / 10 mA |
| Connection cable | Ø 2.9 mm PUR 2× 0.25 mm² |

Bend radii:

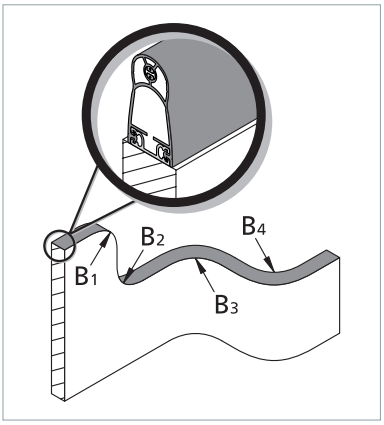


270121 v3.11-RiA

# Dimensions and distances

SP 67-2 TPE (1:2)

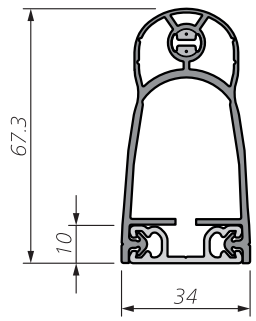


Dimensional tolerances according to ISO 3302 E2/L2.

**Test conditions**

according to ISO 13856-2

- Installation position B
- Temperature +20 °C
- Measurement point c3
- Test sample 1 with Ø 80 mm
- without control unit

All data stated here is documented in EC design type test certificates.

## Force-distance ratios

| | |
|---|---|
| Test speed | **10 mm/s** |
| Actuation force | 41 N |
| Response time | 880 ms |
| Actuation distance (A) | 8.8 mm |
| Overtravel distance | |
| up to 250 N (B1) | 35.7 mm |
| up to 400 N (B2) | 37.9 mm |
| up to 600 N (C) | 41 mm |
| Total deformation | 49.8 mm |

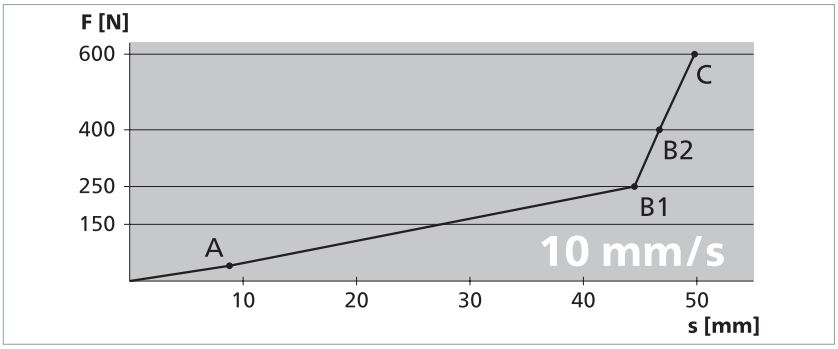


| | |
|---|---|
| Test speed | **100 mm/s** |
| Actuation force | 43 N |
| Response time | 101 ms |
| Actuation distance (A) | 10.1 mm |
| Overtravel distance | |
| up to 250 N (B1) | 35.4 mm |
| up to 400 N (B2) | 37.8 mm |
| up to 600 N (C) | 39.8 mm |
| Total deformation | 49.9 mm |

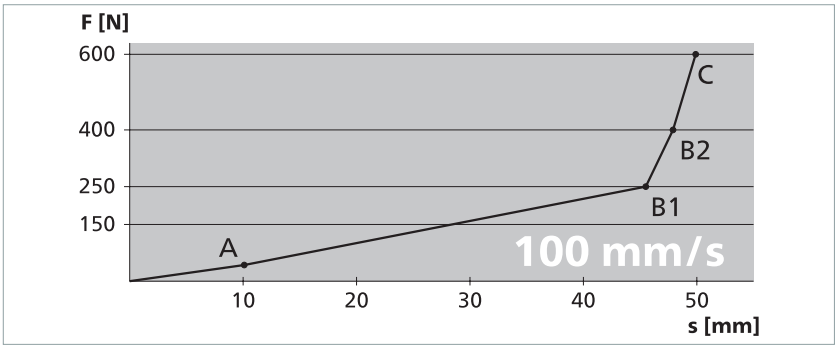


| | |
|---|---|
| Test speed | **200 mm/s** |
| Actuation force | 45 N |
| Response time | 51.5 ms |
| Actuation distance (A) | 10.3 mm |
| Overtravel distance | |
| up to 250 N (B1) | 36.5 mm |
| up to 400 N (B2) | 39.4 mm |
| up to 600 N (C) | 41.3 mm |
| Total deformation | 51.6 mm |

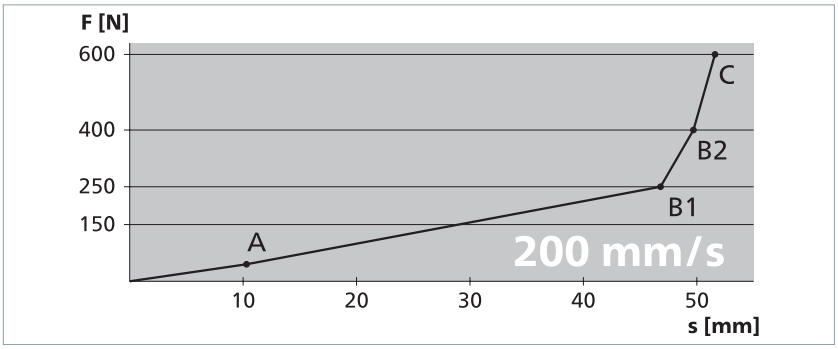


270121 v3.11-RiA

# Technical data

## SK SP 87-2 TPE

Sensor profile SP manufactured with end caps.

| **Sensor profile (without control unit)** | **SK SP/W 87-2 TPE or SK SP/BK 87-2 TPE** |
|---|---|
| Test principles | EN 12978, ISO 13849-1, ISO 13856-2 |
| **Switching characteristics at $v_{test}$ = 100 mm/s** | |
| Switching operations | 10,000 |
| Actuation force | |
| Test piece Ø 20 mm | < 50 N |
| Test piece (cylinder) Ø 80 mm | < 150 N |
| Actuation distance | |
| Test piece (cylinder) Ø 80 mm | 9 mm |
| Actuation angle | |
| Test piece (cylinder) Ø 80 mm | ±45° |
| Finger detection | yes |
| **Safety classifications** | |
| ISO 13849-1: $B_{10D}$ | 2× $10^6$ |
| **Mechanical operating conditions** | |
| Sensor length (min./max.) | 10 cm / 25 m |
| Cable length (min./max.) | 10 cm / 100 m |
| Bend radii, minimal | |
| $B_1$ / $B_2$ / $B_3$ / $B_4$ | 1000 / 1000 / 200 / 200 mm |
| Operating speed | |
| (min. / max.) | 10 mm/s / 200 mm/s |
| max. load capacity (signal) | 600 N |
| Tensile load, cable (max.) | 20 N |
| IEC 60529: Degree of protection | IP67 |
| Operating temperature | -25 to +55 °C |
| short-term (15 min) | -40 to +80 °C |
| Storage temperature | -40 to +80 °C |
| Weight | without/with Aluminium profile (Type) |
| SP 87-2 | 0.64 / 1.06 kg/m (C 36) |
| **Electrical operating conditions** | |
| Terminal resistance | 8k2 ±1 % |
| Rated capacity (max.) | 250 mW |
| Contact transition resistance | < 400 Ohm (per sensor) |
| Number of sensors type BK | max. 5 in series (for more information refer to the chapter *Limits*) |
| Switching voltage (max.) | DC 24 V |
| Switching current (min. / max.) | 1 mA / 10 mA |
| Connection cable | Ø 2.9 mm PUR 2× 0.25 mm² |

Bend radii:

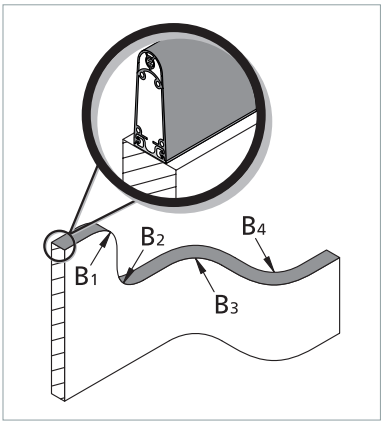


270121 v3.11-RiA

# Dimensions and distances

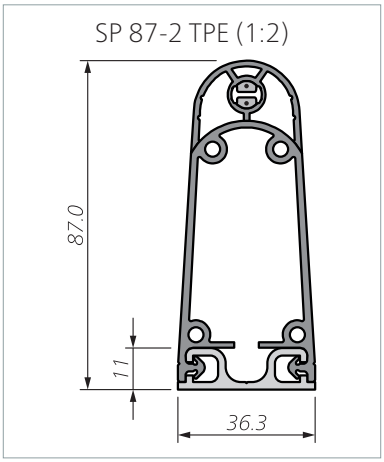


Dimensional tolerances according to ISO 3302 E2/L2.

**Test conditions**

according to ISO 13856-2

- Installation position B
- Temperature +20 °C
- Measurement point c3
- Test sample 1 with Ø 80 mm
- without control unit

All data stated here is documented in EC design type test certificates.

## Force-distance ratios

| | |
|---|---|
| Test speed | **10 mm/s** |
| Actuation force | 34 N |
| Response time | 850 ms |
| Actuation distance (A) | 8.5 mm |
| Overtravel distance | |
| up to 250 N (B1) | 52.3 mm |
| up to 400 N (B2) | 54.7 mm |
| up to 600 N (C) | 56.2 mm |
| Total deformation | 64.7 mm |

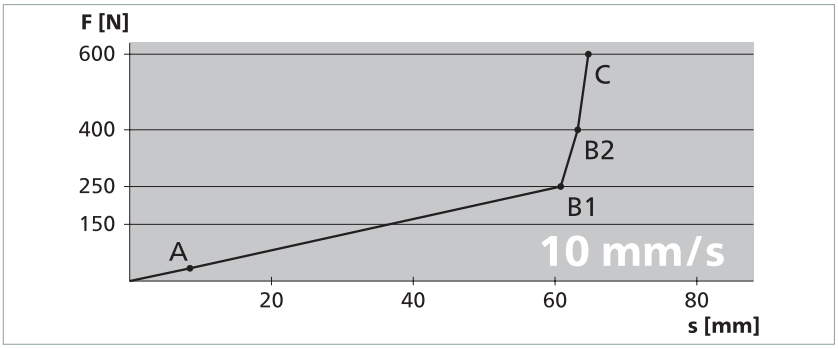


| | |
|---|---|
| Test speed | **100 mm/s** |
| Actuation force | 38 N |
| Response time | 81 ms |
| Actuation distance (A) | 8.1 mm |
| Overtravel distance | |
| up to 250 N (B1) | 51.9 mm |
| up to 400 N (B2) | 54.4 mm |
| up to 600 N (C) | 56.0 mm |
| Total deformation | 64.1 mm |

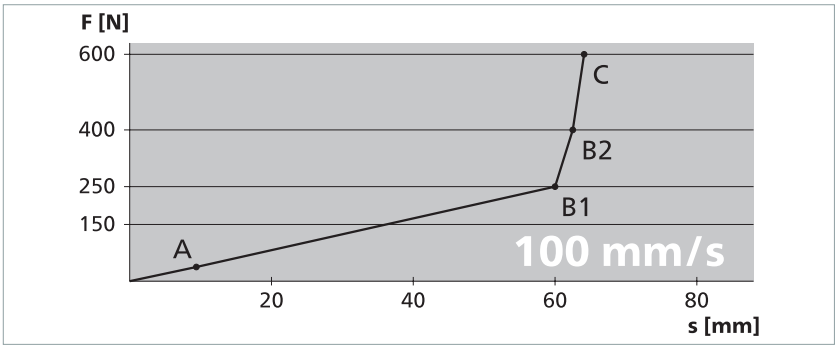


| | |
|---|---|
| Test speed | **200 mm/s** |
| Actuation force | 37 N |
| Response time | 47 ms |
| Actuation distance (A) | 9.4 mm |
| Overtravel distance | |
| up to 250 N (B1) | 51.5 mm |
| up to 400 N (B2) | 54.0 mm |
| up to 600 N (C) | 55.5 mm |
| Total deformation | 64.9 mm |

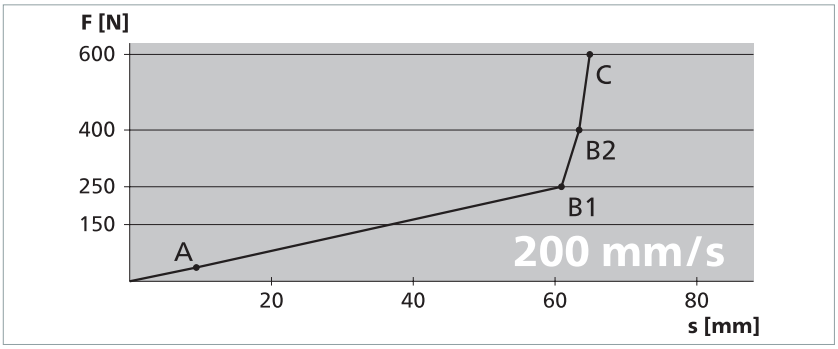


270121 v3.11-RiA

# Marking

If you combine sensors with control units and thereby release pressure-sensitive safeguards onto the market, observe the basic regulations in ISO 13856.
Apart from technical requirements, this applies in particular also to marking and information for use.

# Conformity

## EC design test

The product was tested by an independent institute.
An EC design type test certificate confirms conformity.
The EC design type test certificate is available in the download section of the website: www.mayser.com .

# UL certification

The design type of the product complies with the basic requirements of UL certification:

- UL 325

270121 v3.11-RiA